WTC
Drawing Book 7

Chapters 7-8

SKILLING, HELLE, CHRISTIANSEN, ROBERTSON — Structural & Civil Engineers

PROJECT THE WORLD TRADE CENTER | TITLE FLOOR TRUSSES - INDEX & GENERAL NOTES | DATE 1-17-69

WTC1-25-LERA

REVISIONS

2-3-69
3-3-69
3-19-69
4-1-69
4-21-69
Printed 5-1-69

GENERAL NOTES

1. All material, including detail material to be Fy = 50 except as noted. 1½" x 5/8" Straps(Detail 12),15" & 18" channels(Detail 13) and deck support angles(Detail 12 & 16) to be Fy = 36.
2. All welding shall be accomplished using E70xx low hydrogen electrodes or other equivalent, approved welding process. Field welding shall be performed under Contract WTC-230.00.
3. All bolted connections shall be friction type connections. All bolts shall be ASTM A325 bolts except where ASTM A490 bolts are specifically called for in the drawings. Washer shall be used under both bolt head and nut at all locations with oversize or elongated holes, in accordance with the requirement of FB1, FB2 & FB3. Bolts and washers will be supplied under Contract WTC-234.00 and installed under Contract WTC-230.00.
4. All floor truss angles have long legs back to back or vertical unless noted (SV) in the drawings, in which case, short legs shall be back to back or vertical.
5. Forces in truss members are indicated thus in the drawings:

   Compression (-)
   Tension (+)

6. All 29T trusses shall be cambered to a parabolic camber. Camber diagrams 7-B7-26 indicates required camber at mid span.
7. Truss details are shown in 7-B8. See index 7-B8-1.
8. See SB-18, SB-19, SB-20 & SB-21 for location of trusses. See SB-18, SB-19, SB-20, SB-21 and this chapter of Drawing Book 7 (7-B7) for location of Details.
9. See SB-184, SB-185, SB-186 & SB-187 for Steel Deck Plans and Shear stud location and number. Steel deck shall be furnished under Contract WTC-222.00 and installed under Contract WTC-230.00. Shear studs shall be furnished and installed under Contract WTC-230.00
10. Seats for trusses at core perimeter are shown in Drawing Book 6 and furnished under Contract WTC-226.00. Seats for trusses at the exterior wall are shown in Drawing Book 4 and furnished under Contract WTC-214.00.
11. Work lines for diagonal and vertical web members shall be the applicable X or Y dimension shown in the AISC Manual, Sixth Edition, rounded to the nearest 1/16 inch, except that where a specific work line is dimensioned in the Drawings, the dimensioned work line shall be used.

INDEX

7-B7-1	Index & General Notes
7-B7-2	Floor Truss 29T1, 29T1.1, 29T1.2
7-B7-3	Floor Truss 29T2
7-B7-4	Floor Truss 29T3
7-B7-5	Floor Truss 29T4, 29T4.1, 29T4.2
7-B7-6.1	Floor Truss 29T5 & 29T6
7-B7-6.2	Floor Truss 29T5 & 29T6
7-B7-7	Floor Truss 29T7 & 29T8
7-B7-8	Floor Truss 29T9
7-B7-9	Floor Truss 29T10 & 29T11
7-B7-10	Floor Truss 29T12
7-B7-11	Floor Truss 29T13
7-B7-12	Floor Truss 29T14
7-B7-13	Floor Truss 29T15
7-B7-14	Floor Truss 29T16
7-B7-15	Floor Truss 29T17
7-B7-16	Floor Truss 29T18
7-B7-17	Floor Truss 29T19
7-B7-18	Floor Truss 29T20
7-B7-19	Floor Truss 29T21 & 29T22
7-B7-20	Floor Truss 29T23 & 29T24
7-B7-21	Floor Truss B1, B2, B3, B4
7-B7-22	Floor Truss B5, B6, B7
7-B7-23	Floor Truss B10, B11, B12, B13
7-B7-24	Floor Truss B14, B15, B16, B17
7-B7-25	Floor Truss B18, B19, B20
7-B7-26	Floor Truss, Camber Diagrams

LICENSED PROFESSIONAL ENGINEER — LESLIE E. ROBERTSON — No. 34360 — UNIVERSITY OF THE STATE OF NEW YORK

DESIGNED

DRAWN

REVIEWED W. Brewer R

7-B7-1

SKILLING, HELLE, CHRISTIANSEN, ROBERTSON — Structural & Civil Engineers

PROJECT [redacted]

TITLE FLOOR TRUSS 29TI, 29TI.1, 29TI.2

DATE 3-19-69

REVISIONS

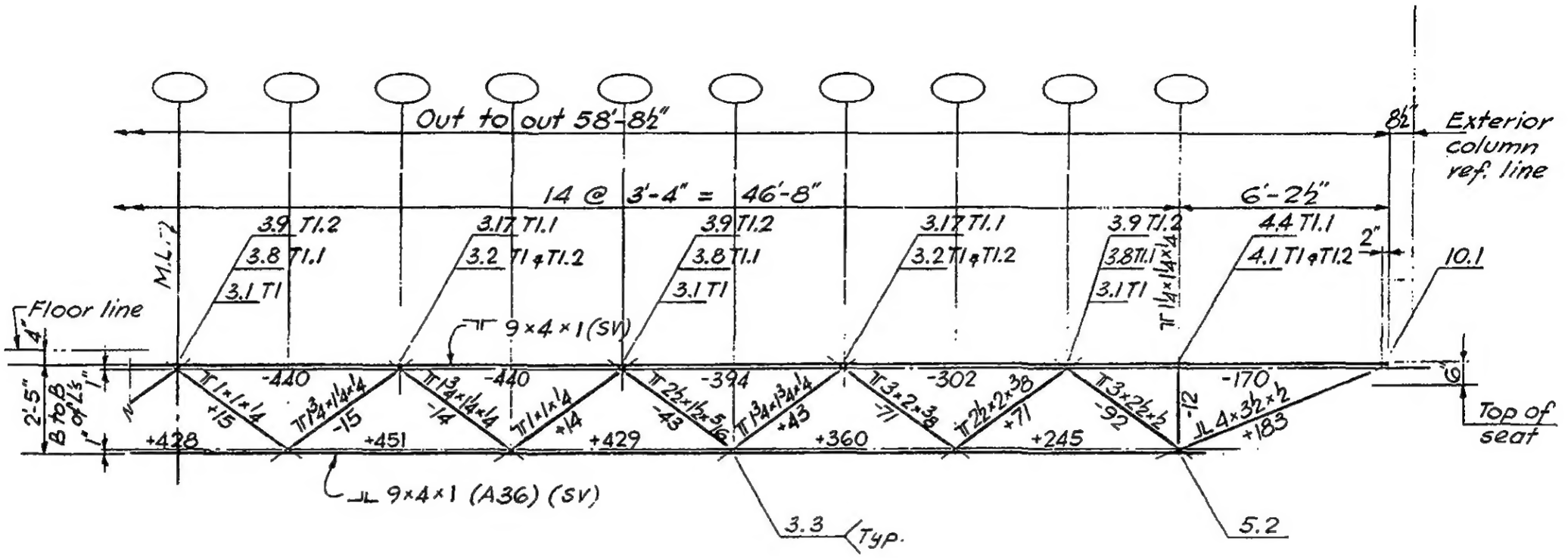

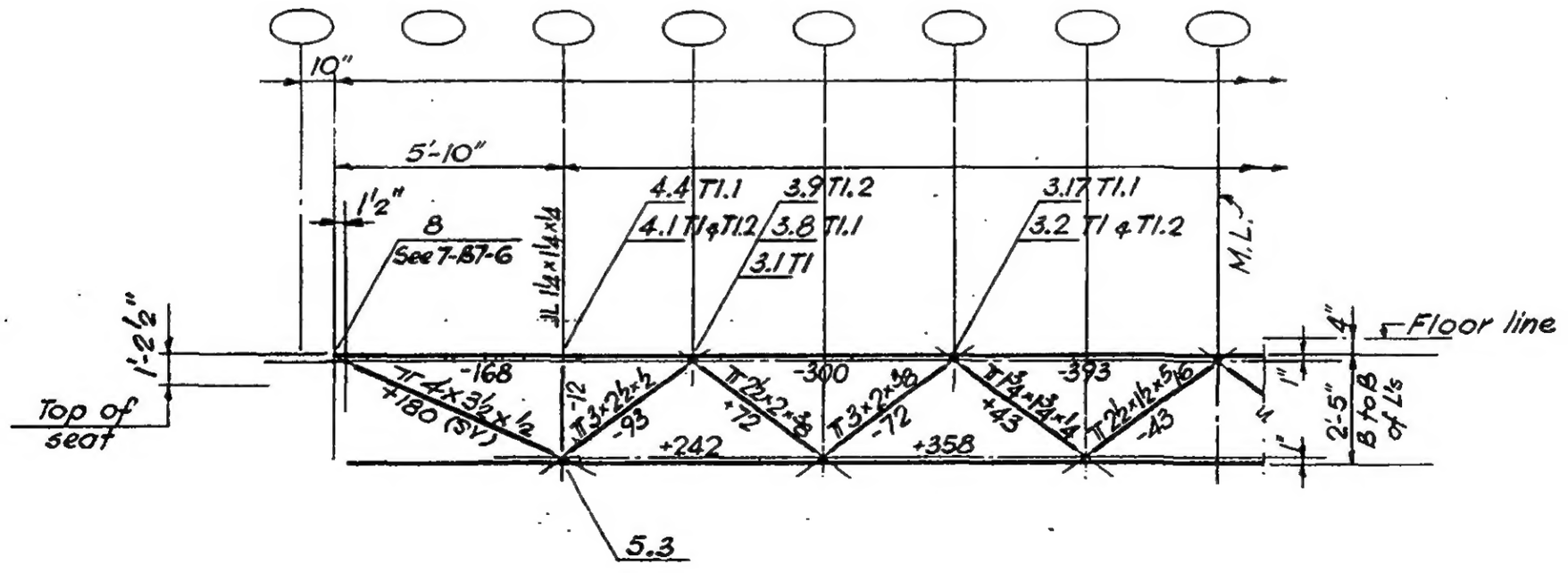

LICENSED PROFESSIONAL ENGINEER
LESLIE E. ROBERTSON
No. 31360
UNIVERSITY OF NEW YORK

DESIGNED K. Hwang

DRAWN J. Gricius

REVIEWED W. Brewer

7-B7-2

SKILLING, HELLE, CHRISTIANSEN, ROBERTSON — Structural & Civil Engineers

PROJECT: THE WORLD TRADE CENTER | TITLE: FLOOR TRUSS 29 T 2 | DATE: 3-19-69

REVISIONS

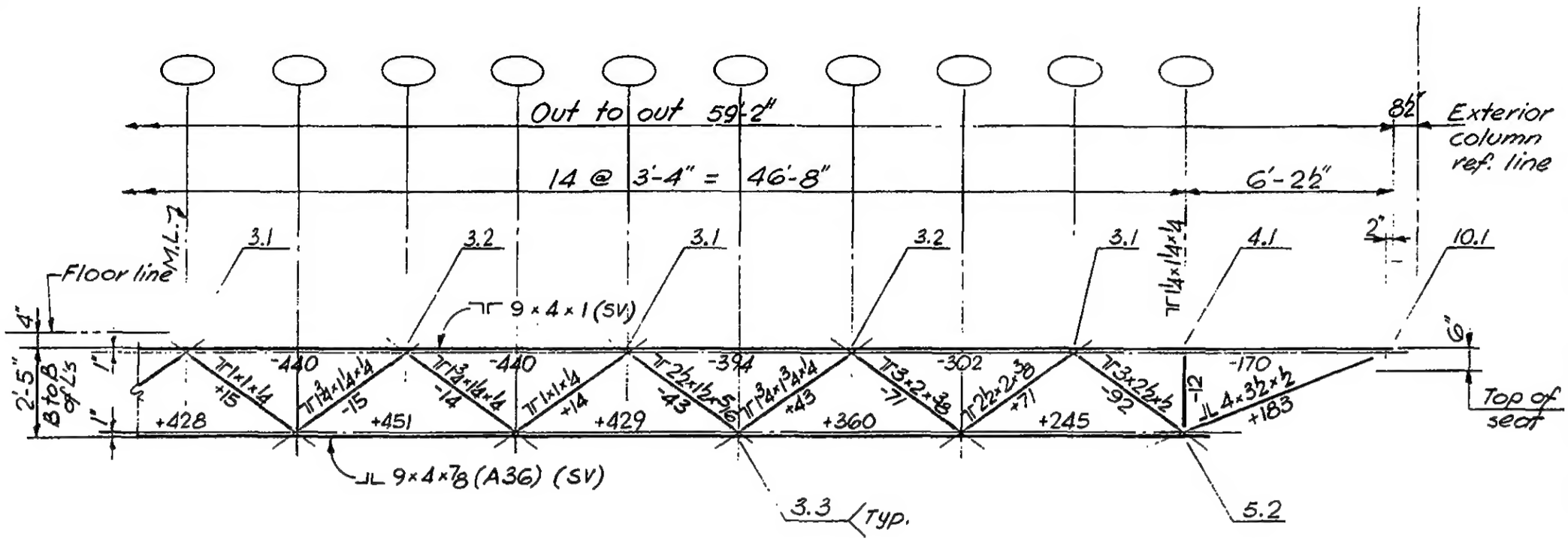

LICENSED PROFESSIONAL ENGINEER — LESLIE E. ROBERTSON — No. 34360 — UNIVERSITY OF THE STATE OF NEW YORK

DESIGNED K. Hwang

DRAWN J. Gricius

REVIEWED W. Brewer

7-B7-3

SKILLING, HELLE, CHRISTIANSEN, ROBERTSON — Structural & Civil Engineers

PROJECT THE WORLD TRADE CENTER | TITLE FLOOR TRUSS 29T3 | DATE 3-19-69

REVISIONS

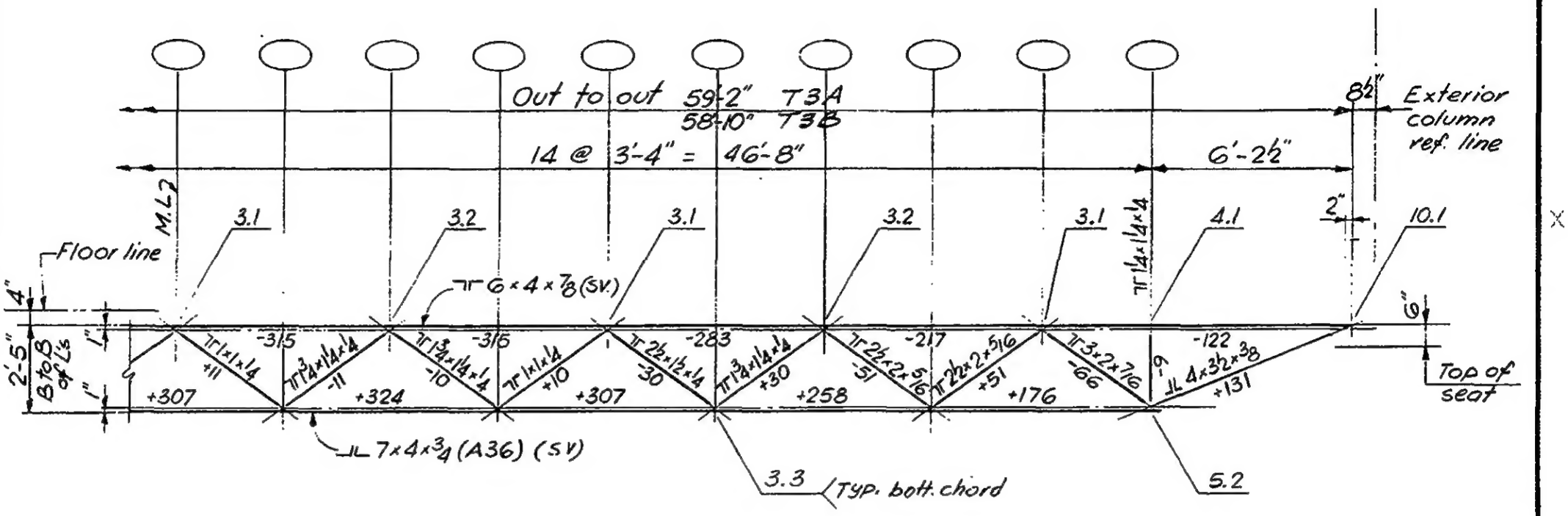

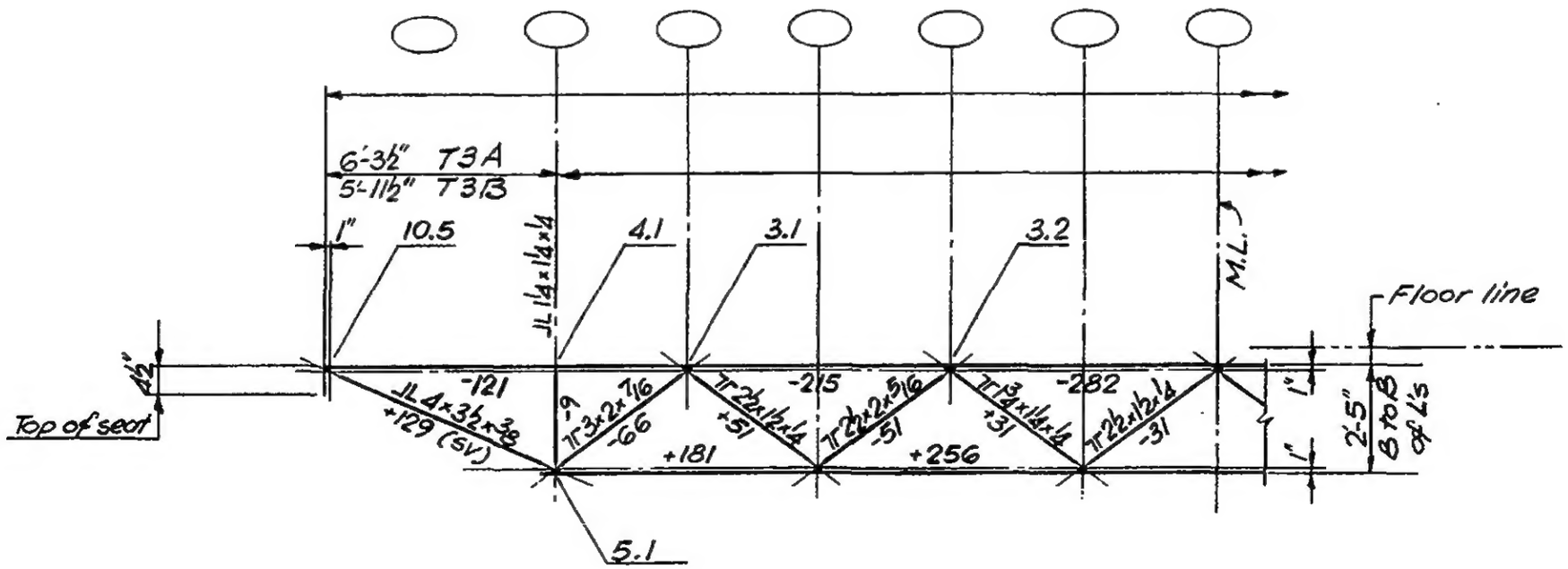

LICENSED PROFESSIONAL ENGINEER — LESLIE E. ROBERTSON — No. 34360 — UNIVERSITY OF THE STATE OF NEW YORK

DESIGNED K. Hwang

DRAWN J. Gricius

REVIEWED W. Brewer

7-B7-4

SKILLING, HELLE, CHRISTIANSEN, ROBERTSON — Structural & Civil Engineers

PROJECT: THE WORLD TRADE CENTER | TITLE: FLOOR TRUSS 29T4, 29T4.1, 29T4.2 | DATE: 3-19-69

REVISIONS

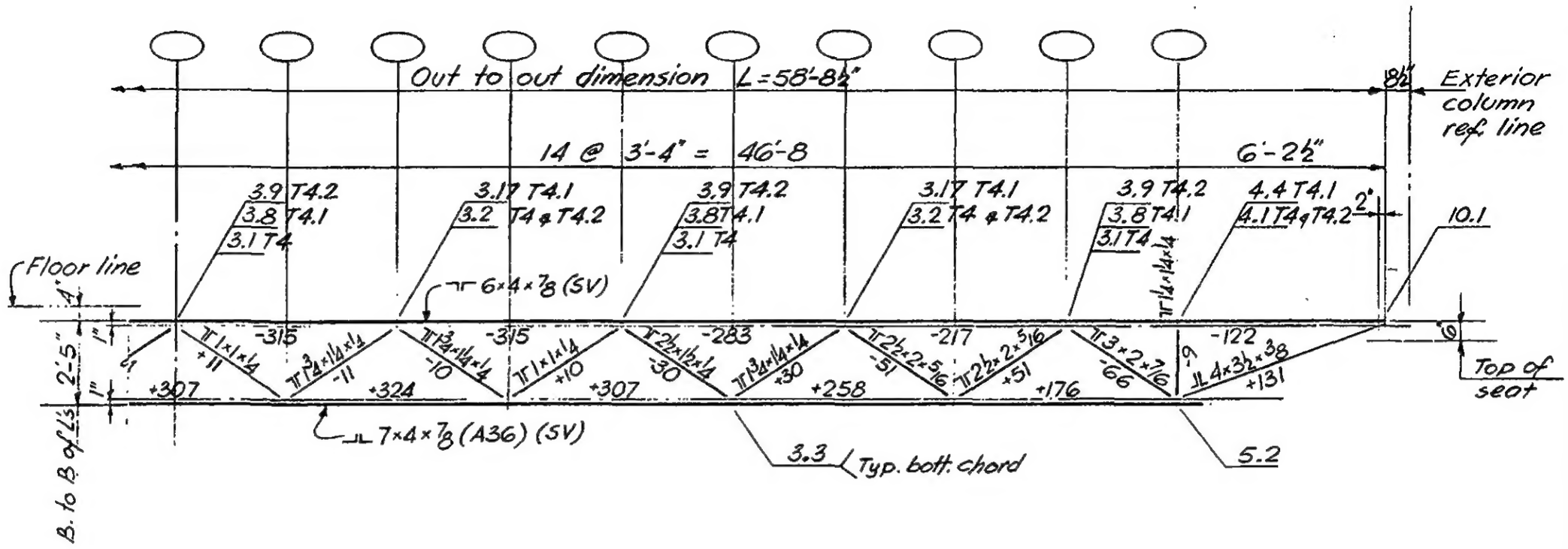

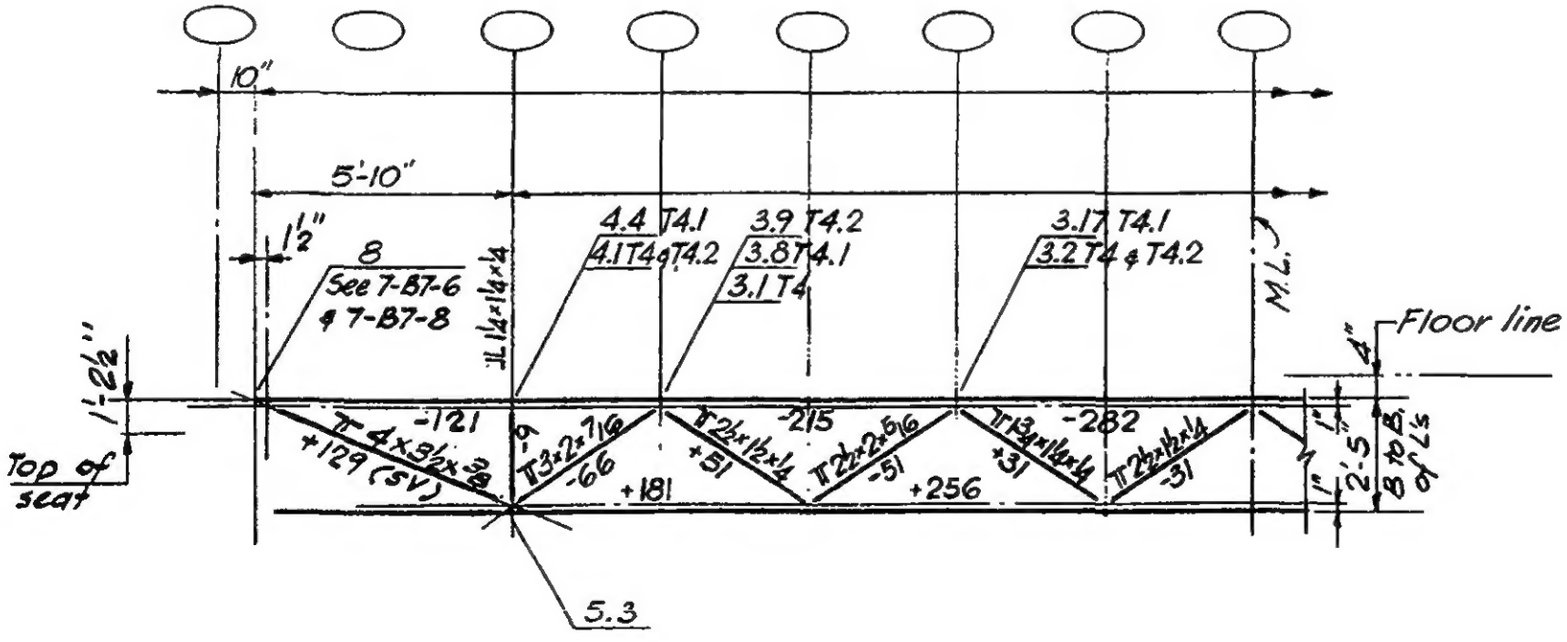

LICENSED PROFESSIONAL ENGINEER — LESLIE E. ROBERTSON — No. 34960 — UNIVERSITY OF THE STATE OF NEW YORK

DESIGNED K. Hwang

DRAWN J. Gricius

REVIEWED W. Brewer

7-B7-5

SKILLING, HELLE, CHRISTIANSEN, ROBERTSON — Structural & Civil Engineers

PROJECT: THE WORLD TRADE CENTER | TITLE: FLOOR TRUSS 29T5 & 29T6 | DATE: 3-19-69

REVISIONS

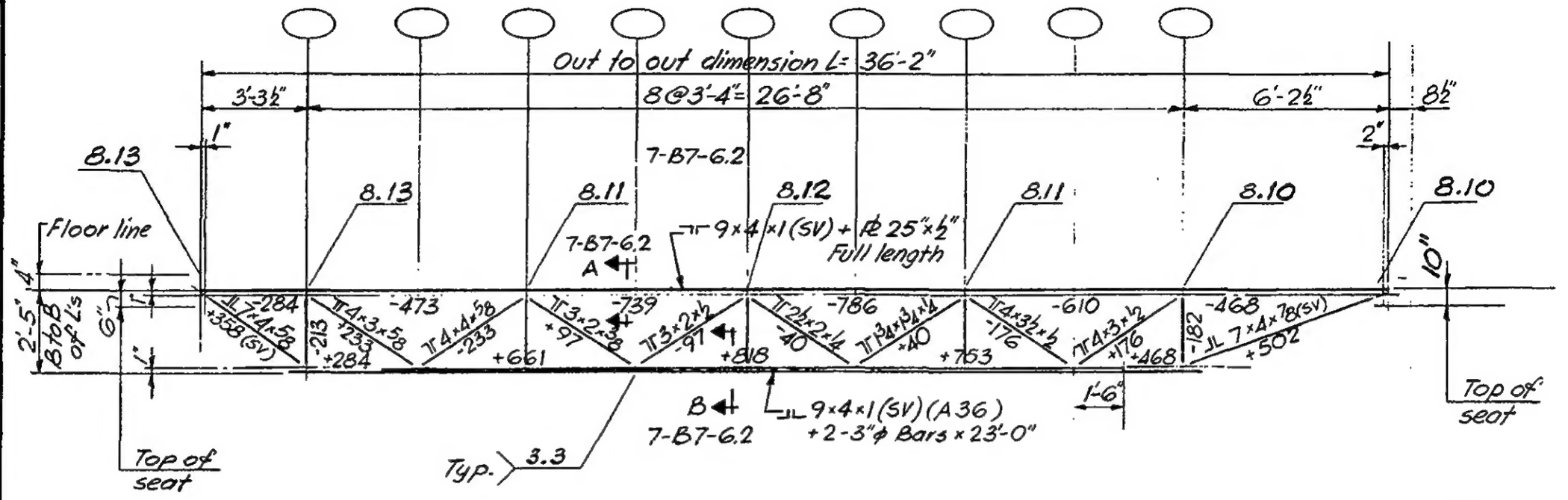

Elevation 29T5

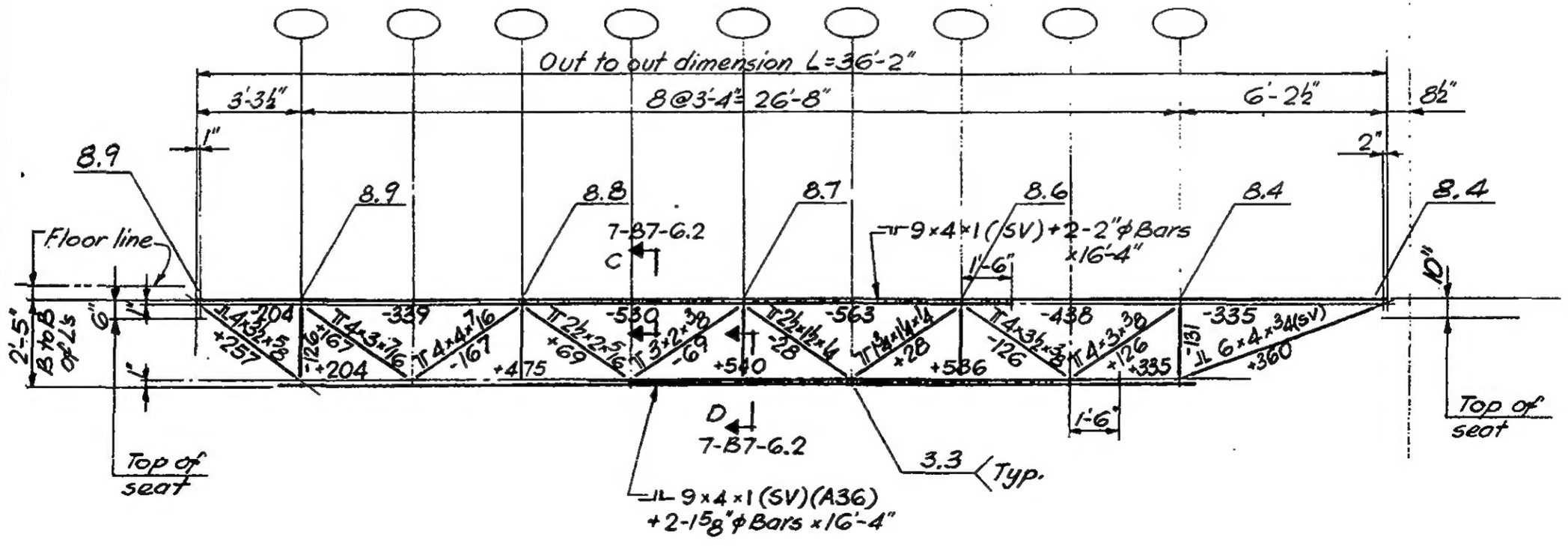

Elevation 29T6

LICENSED PROFESSIONAL ENGINEER — LESLIE E. ROBERTSON — No. 34360 — UNIVERSITY OF THE STATE OF NEW YORK

DESIGNED: K. Hwang
DRAWN: J. Gricius
REVIEWED: W. Brewer

7-B7-6.1

SKILLING, HELLE, CHRISTIANSEN, ROBERTSON — Structural & Civil Engineers

PROJECT THE WORLD TRADE CENTER | TITLE FLOOR TRUSS SECTIONS A-A, B-B, C-C, D-D, E-E | DATE 3-19-69

REVISIONS

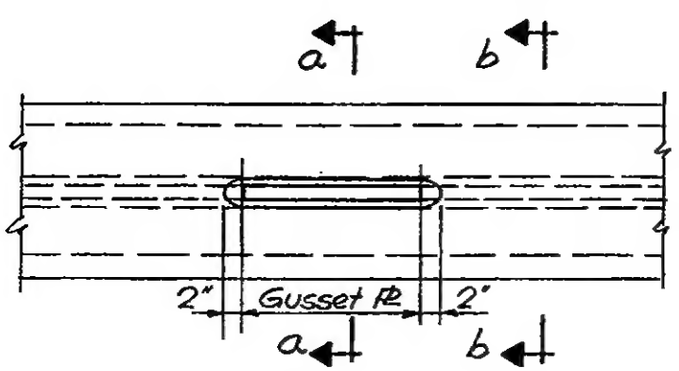

Plan for section A-A

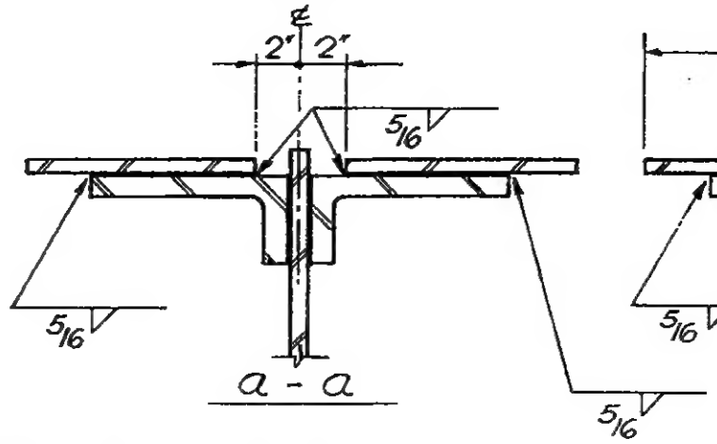

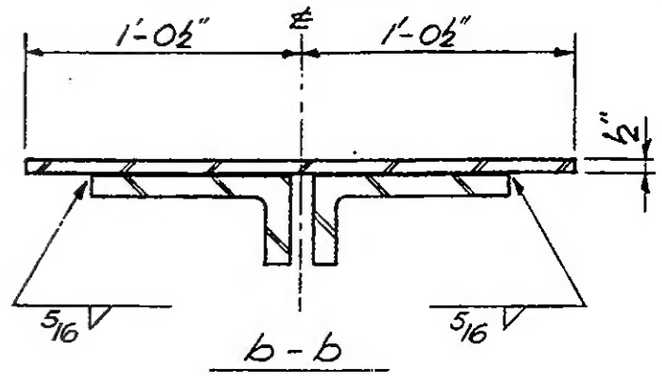

Section A-A

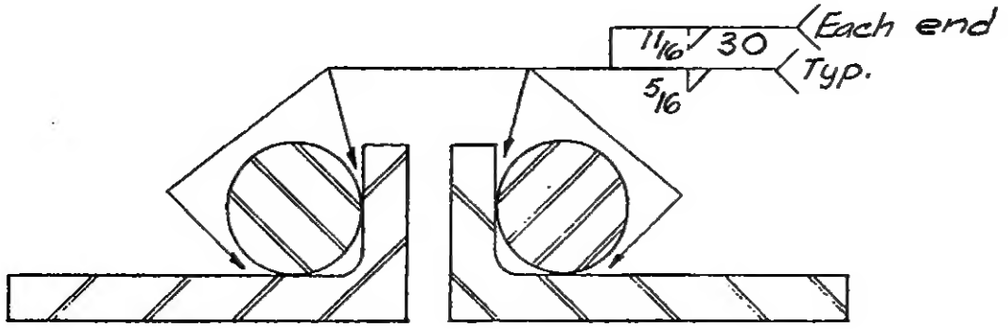

Section B-B

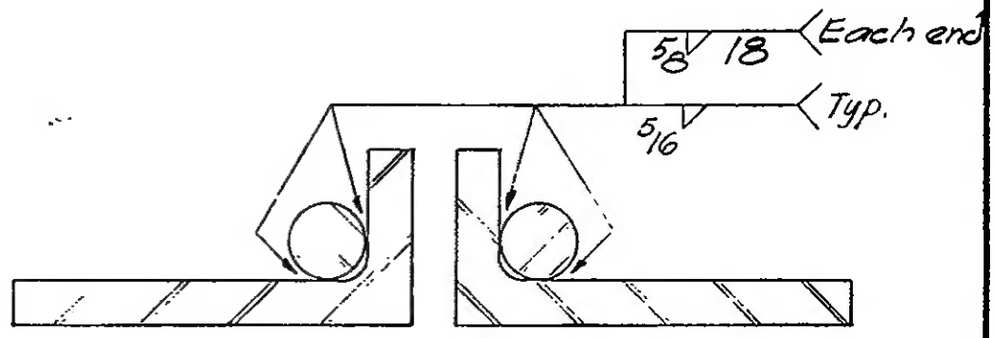

Section D-D

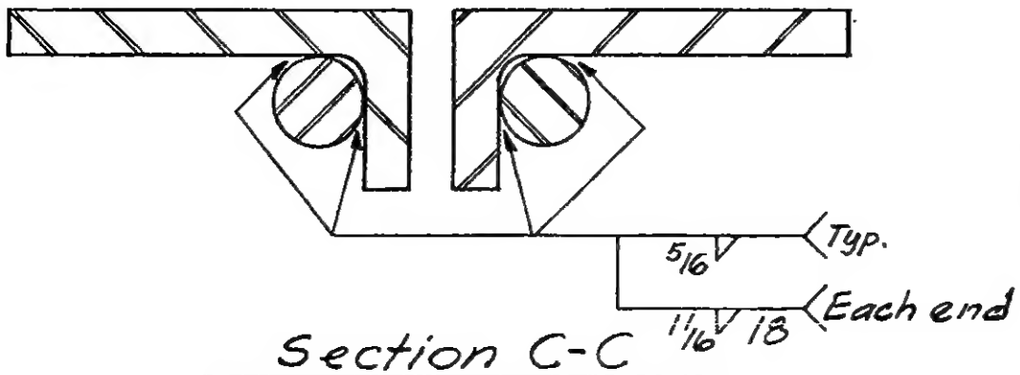

Section C-C

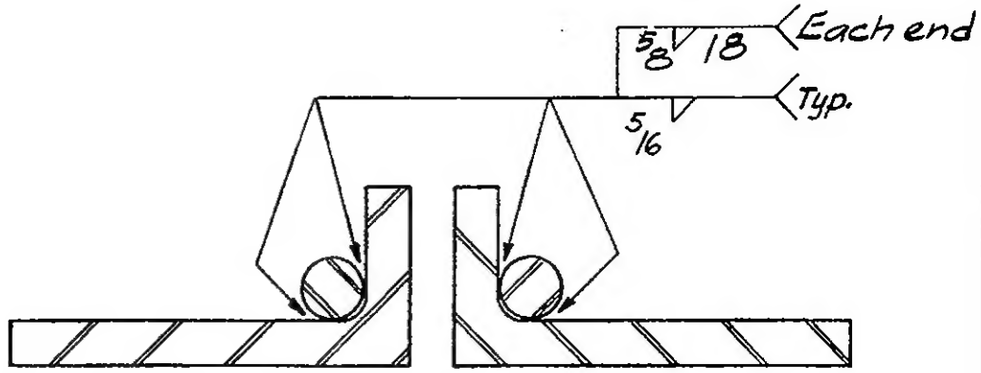

Section E-E

LICENSED PROFESSIONAL ENGINEER
LESLIE E. ROBERTSON
No. 34360
UNIVERSITY OF THE STATE OF NEW YORK

DESIGNED K. Hwang
DRAWN J. Gricius
REVIEWED W. Brewer

7-B7-6.2

SKILLING, HELLE, CHRISTIANSEN, ROBERTSON — Structural & Civil Engineers

PROJECT: THE WORLD TRADE CENTER | TITLE: FLOOR TRUSS 29T7 & 29T8 | DATE: 3-19-69

REVISIONS

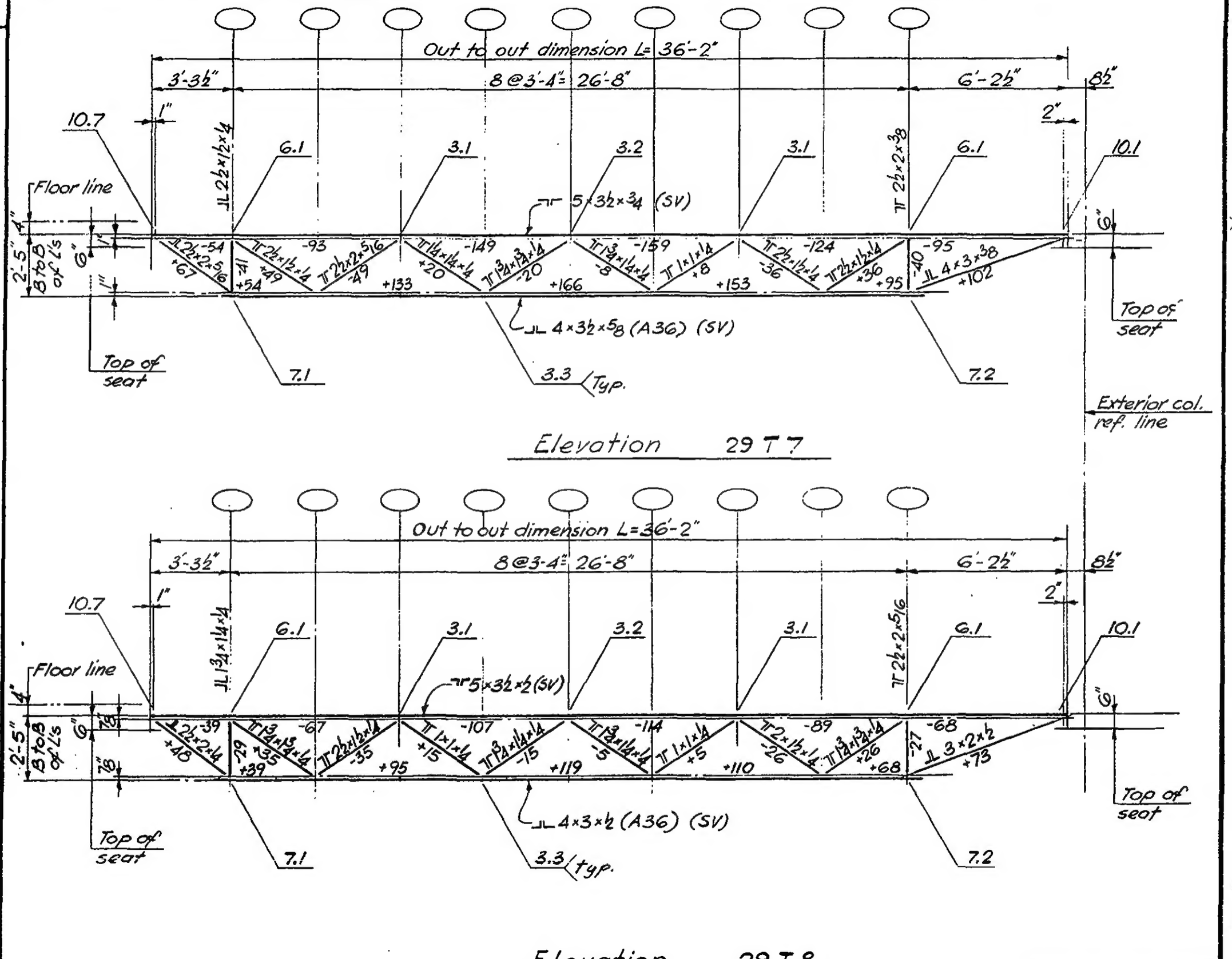

Elevation 29T7

Elevation 29T8

LICENSED PROFESSIONAL ENGINEER
LESLIE E. ROBERTSON
No. 34360
UNIVERSITY OF THE STATE OF NEW YORK

DESIGNED K. Hwang
DRAWN J. Gricius
REVIEWED W. Brewer

7-B7-7

SKILLING, HELLE, CHRISTIANSEN, ROBERTSON — Structural & Civil Engineers

PROJECT THE WORLD TRADE CENTER | TITLE FLOOR TRUSS 29T9 | DATE 3-19-69

REVISIONS

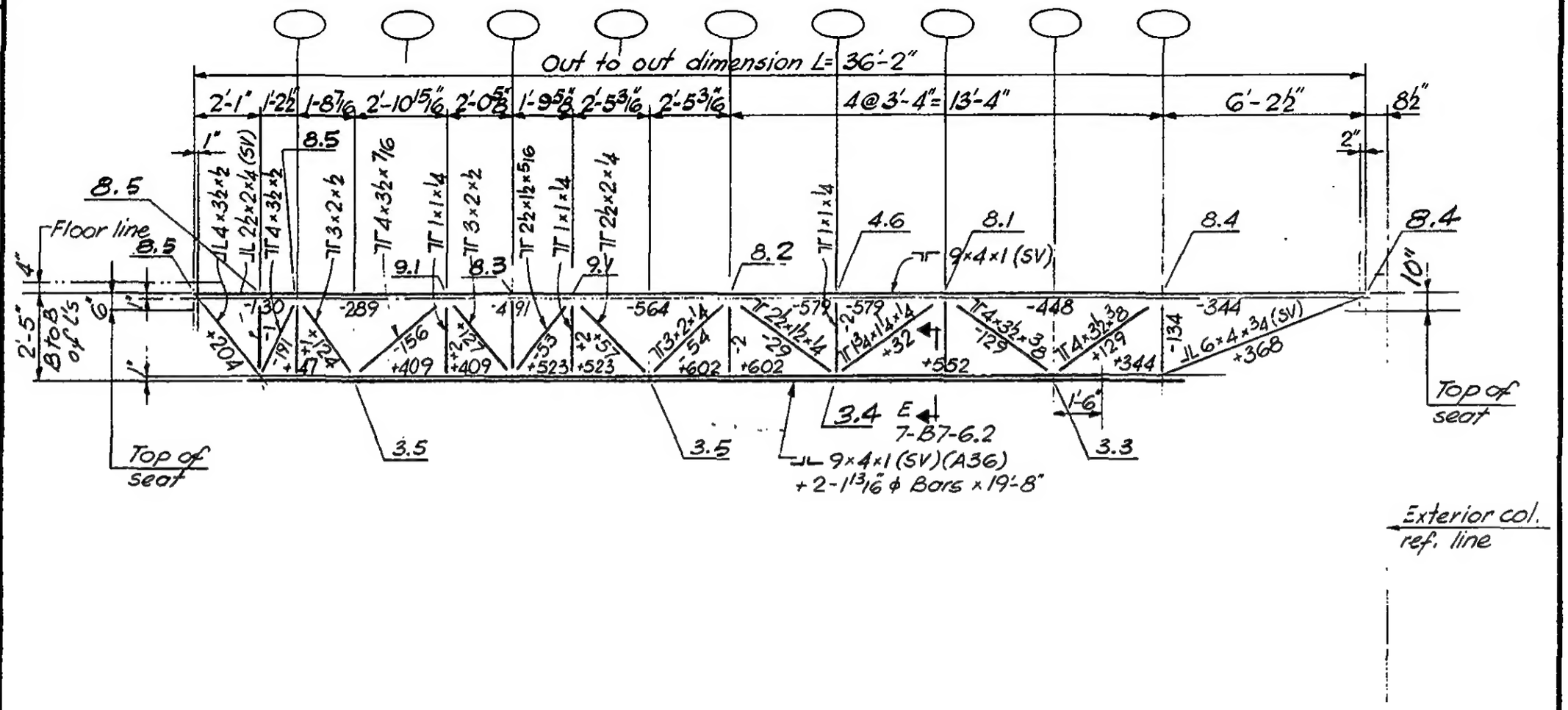

LICENSED PROFESSIONAL ENGINEER
LESLIE E. ROBERTSON
No. 34360
UNIVERSITY OF THE STATE OF NEW YORK

DESIGNED K. Hwang
DRAWN J. Gricius
REVIEWED W. Brewer

7-B7-6

SKILLING, HELLE, CHRISTIANSEN, ROBERTSON — Structural & Civil Engineers

PROJECT: THE WORLD TRADE CENTER | TITLE: FLOOR TRUSS 29T10 & 29T11 | DATE: 3-19-69

REVISIONS

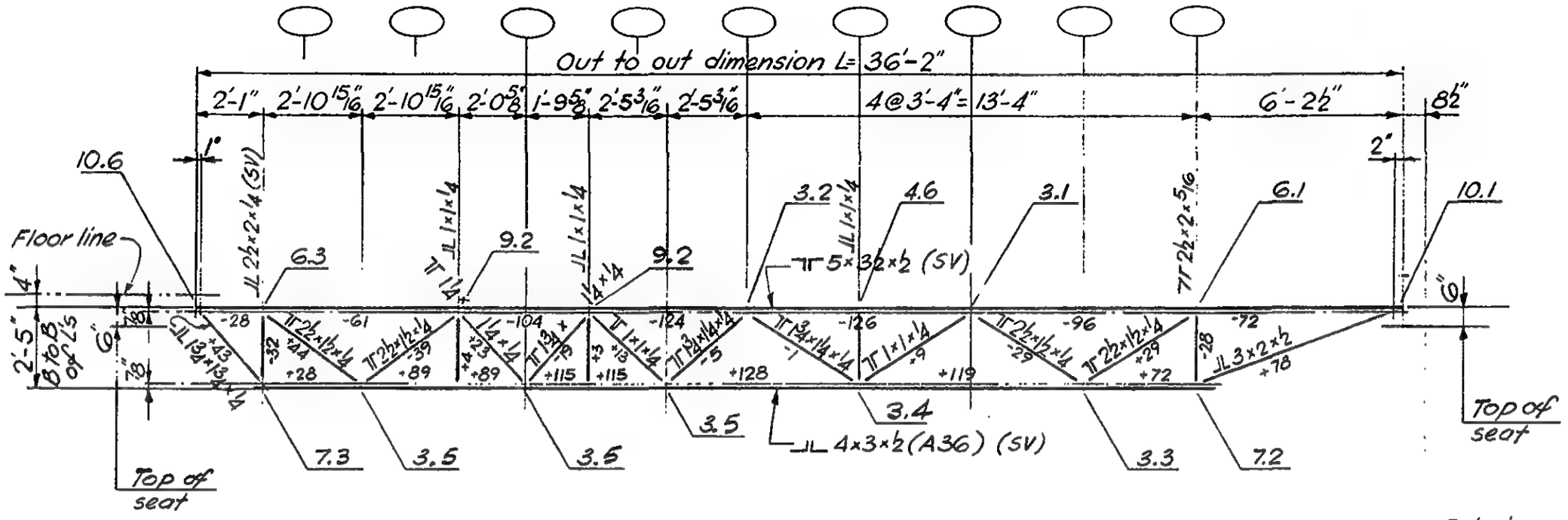

Elevation 29T10

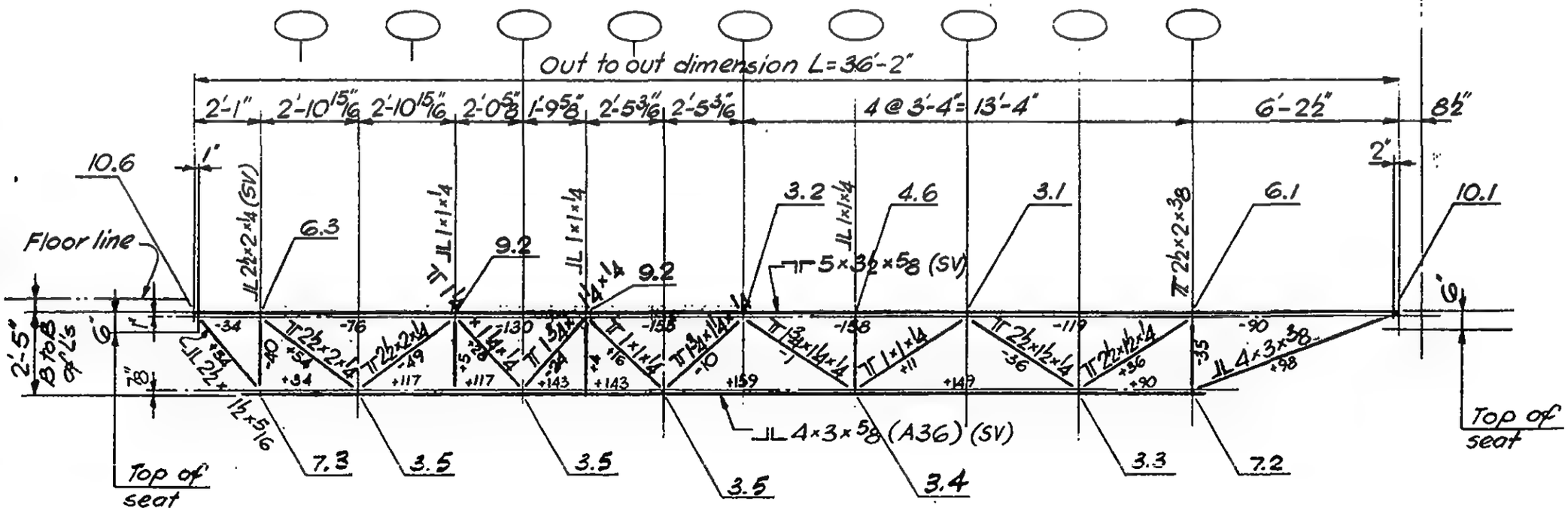

Elevation 29T11

LICENSED PROFESSIONAL ENGINEER — LESLIE E. ROBERTSON — No. 34360 — UNIVERSITY OF THE STATE OF NEW YORK

DESIGNED K. Hwang

DRAWN J. Gricius

REVIEWED W. Brewer

7-87-9

SKILLING, HELLE, CHRISTIANSEN, ROBERTSON — Structural & Civil Engineers

PROJECT: THE WORLD TRADE CENTER | TITLE: FLOOR TRUSS 29T12 | DATE: 3-19-69

REVISIONS

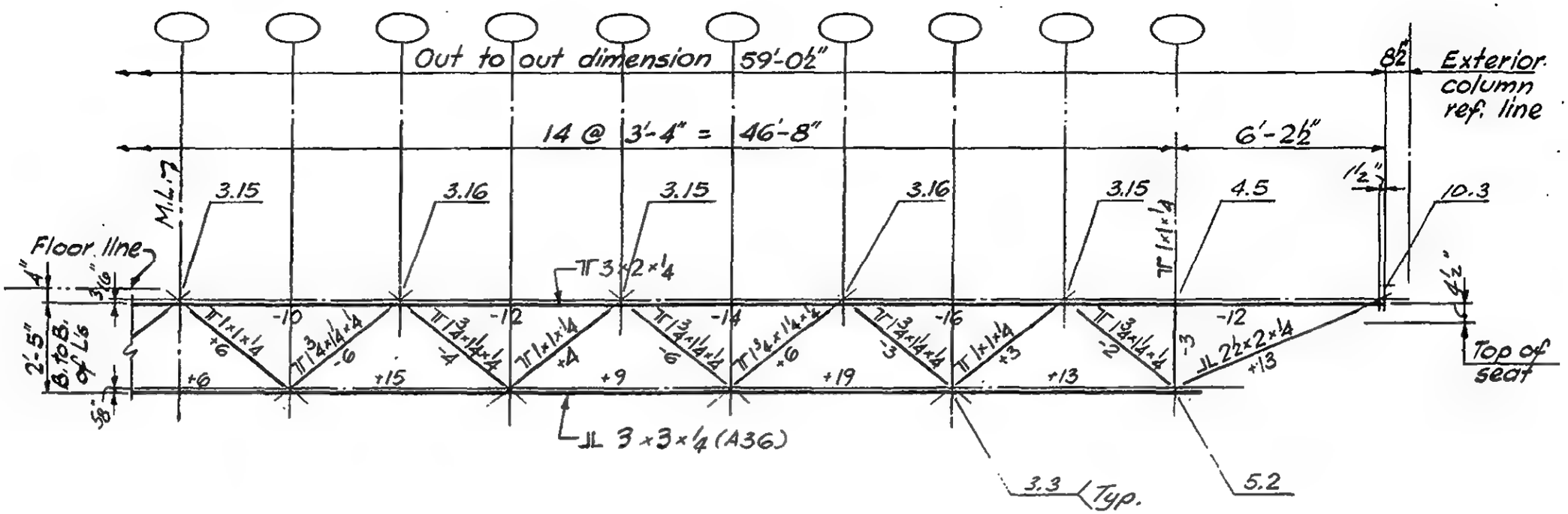

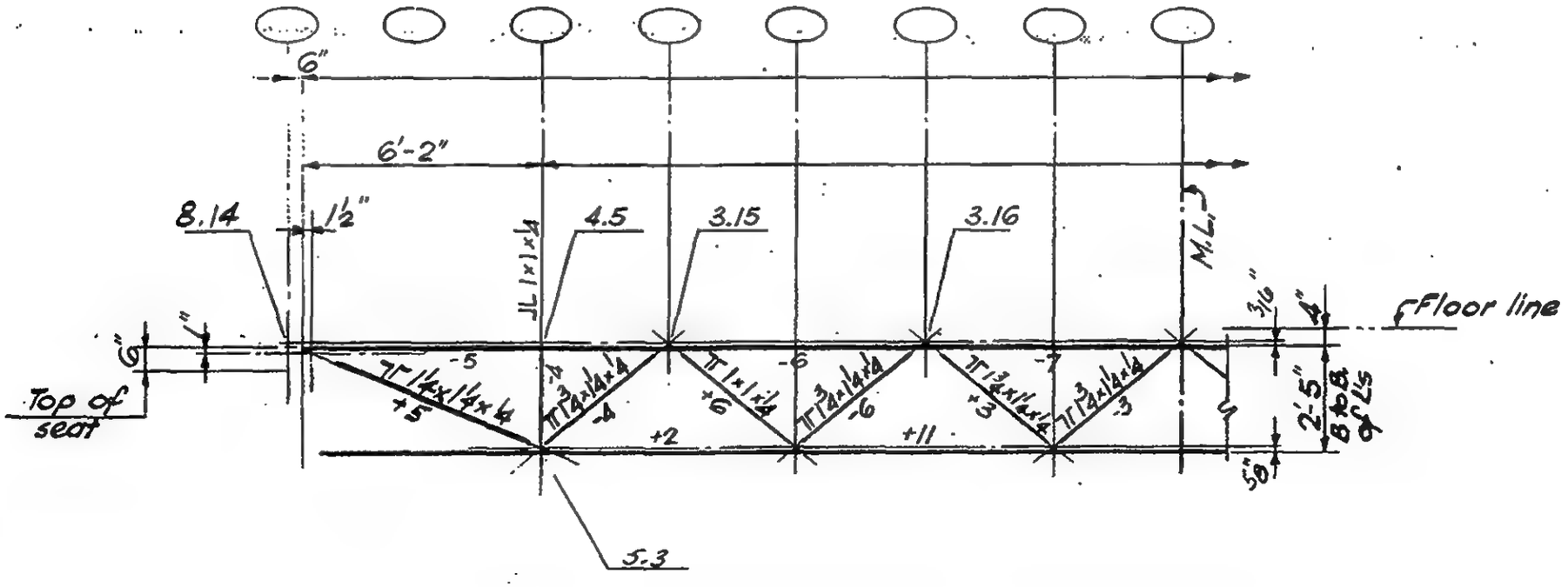

LICENSED PROFESSIONAL ENGINEER — LESLIE E. ROBERTSON — No. 34960 — UNIVERSITY OF THE STATE OF NEW YORK

DESIGNED K. Hwang

DRAWN J. Gricius

REVIEWED W. Brewer

7-B7-10

SKILLING, HELLE, CHRISTIANSEN, ROBERTSON — Structural & Civil Engineers

PROJECT: THE WORLD TRADE CENTER | TITLE: FLOOR TRUSS 29T13 | DATE: 3-19-69

REVISIONS

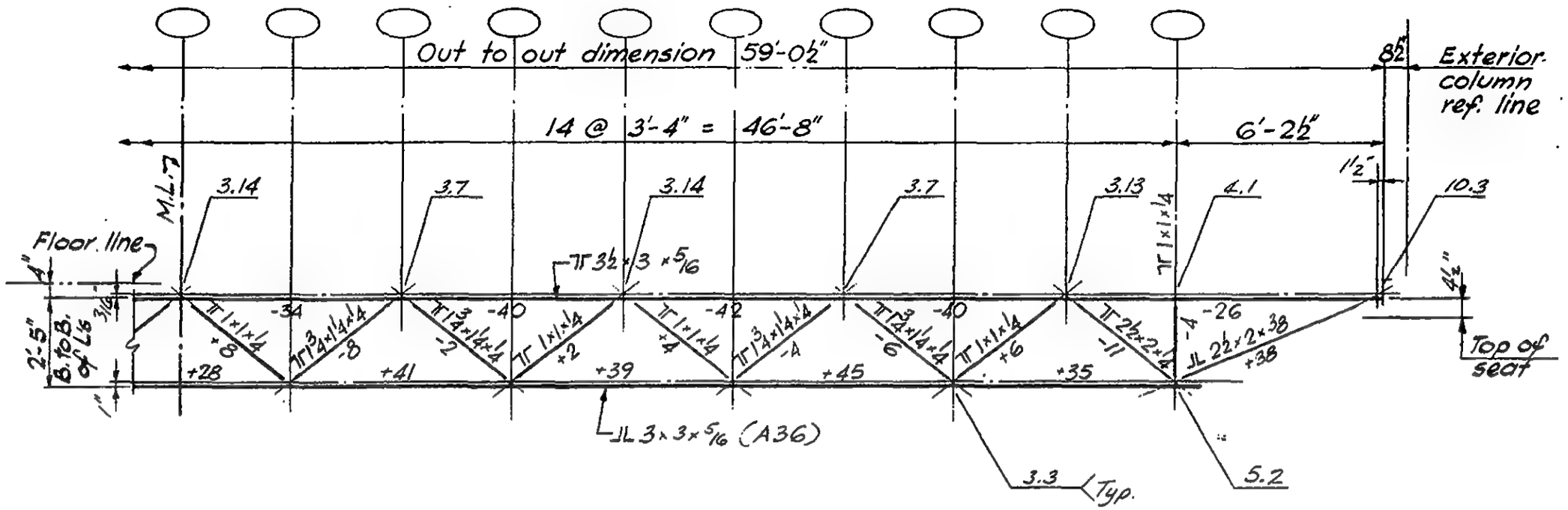

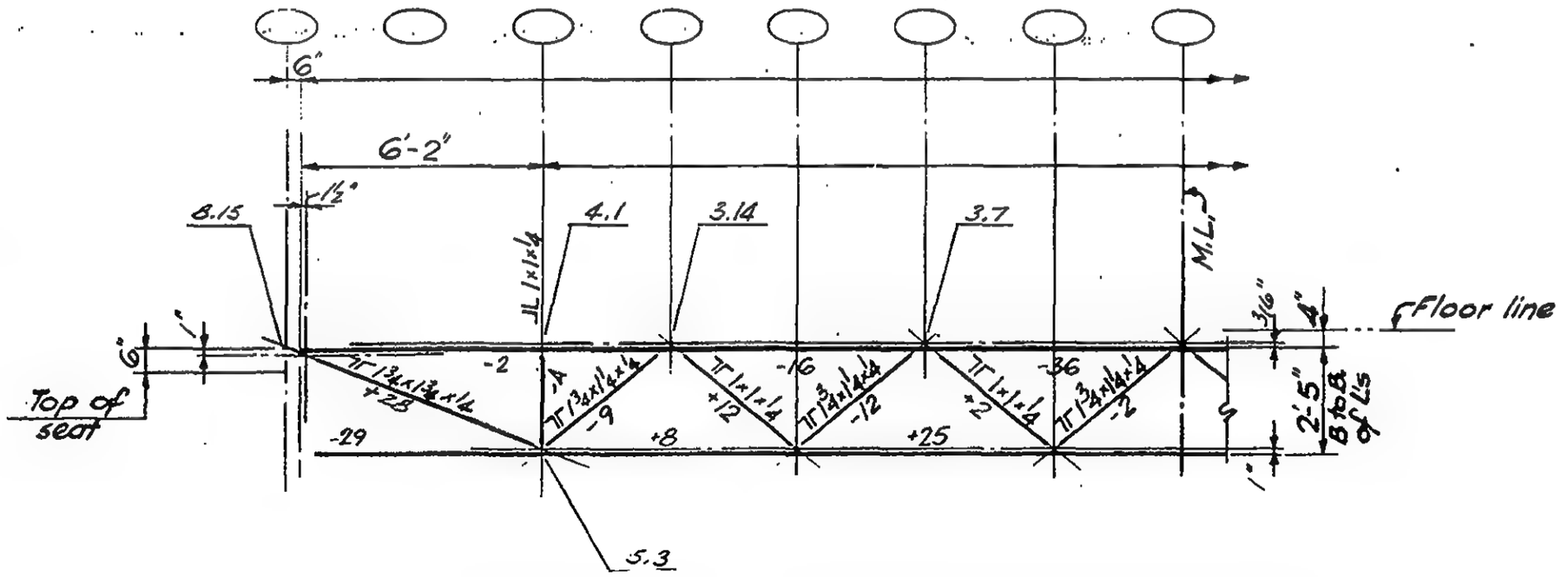

LICENSED PROFESSIONAL ENGINEER — LESLIE E. ROBERTSON — No. 34360 — UNIVERSITY OF THE STATE OF NEW YORK

DESIGNED K. Hwang

DRAWN J. Gricius

REVIEWED W. Brewer

7-B7-11

SKILLING, HELLE, CHRISTIANSEN, ROBERTSON — Structural & Civil Engineers

PROJECT: THE WORLD TRADE CENTER | TITLE: FLOOR TRUSS 29T14 | DATE: 3-19-69

REVISIONS

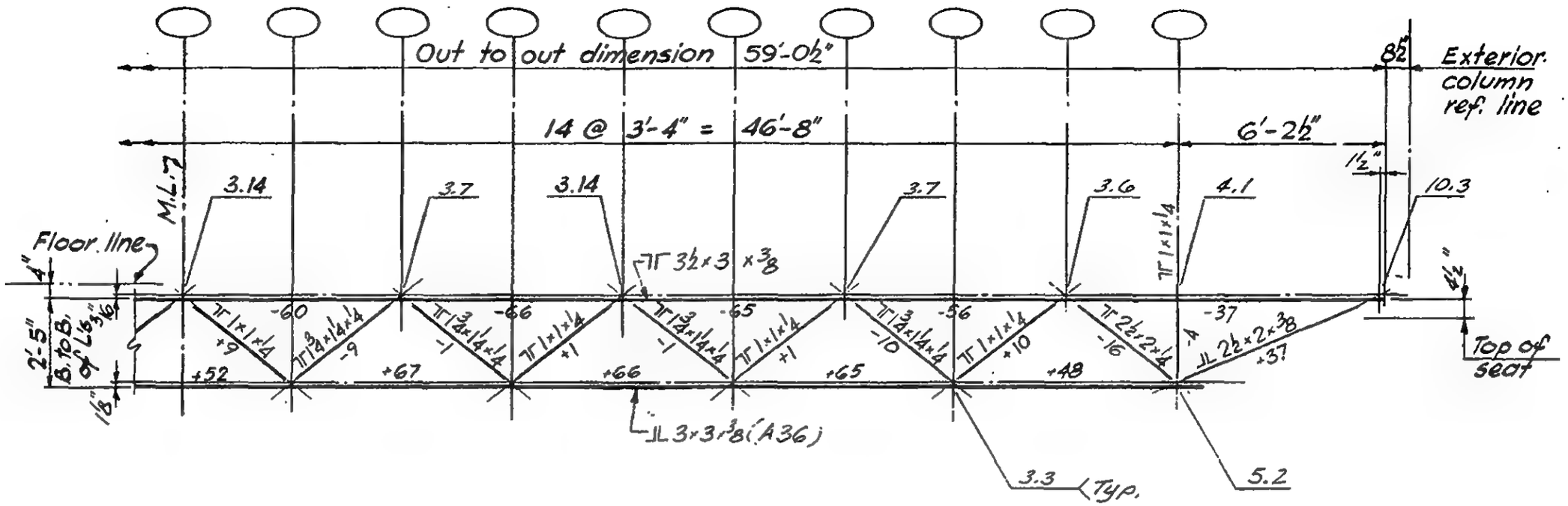

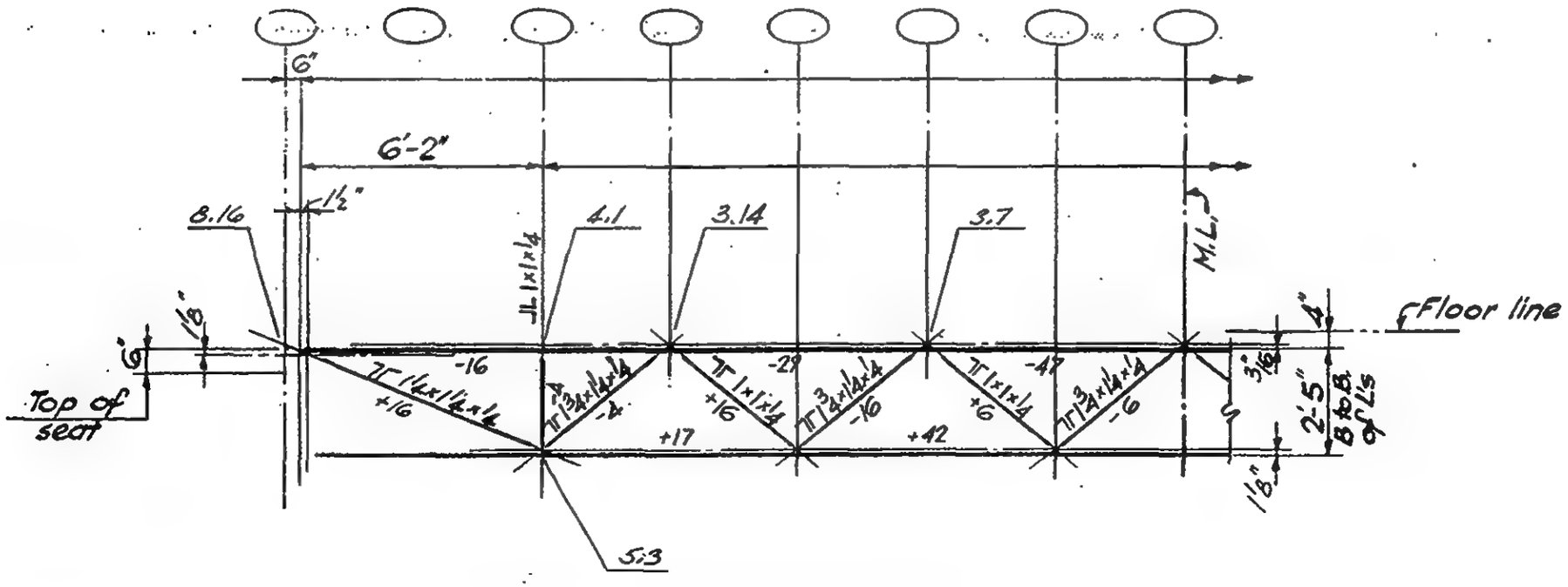

LICENSED PROFESSIONAL ENGINEER — LESLIE E. ROBERTSON — No. 34360 — UNIVERSITY OF THE STATE OF NEW YORK

DESIGNED K. Hwang

DRAWN J. Gricius

REVIEWED W. Brewer

7-B7-12

SKILLING, HELLE, CHRISTIANSEN, ROBERTSON — Structural & Civil Engineers

PROJECT: THE WORLD TRADE CENTER | TITLE: FLOOR TRUSS 29T15 | DATE: 3-19-69

REVISIONS

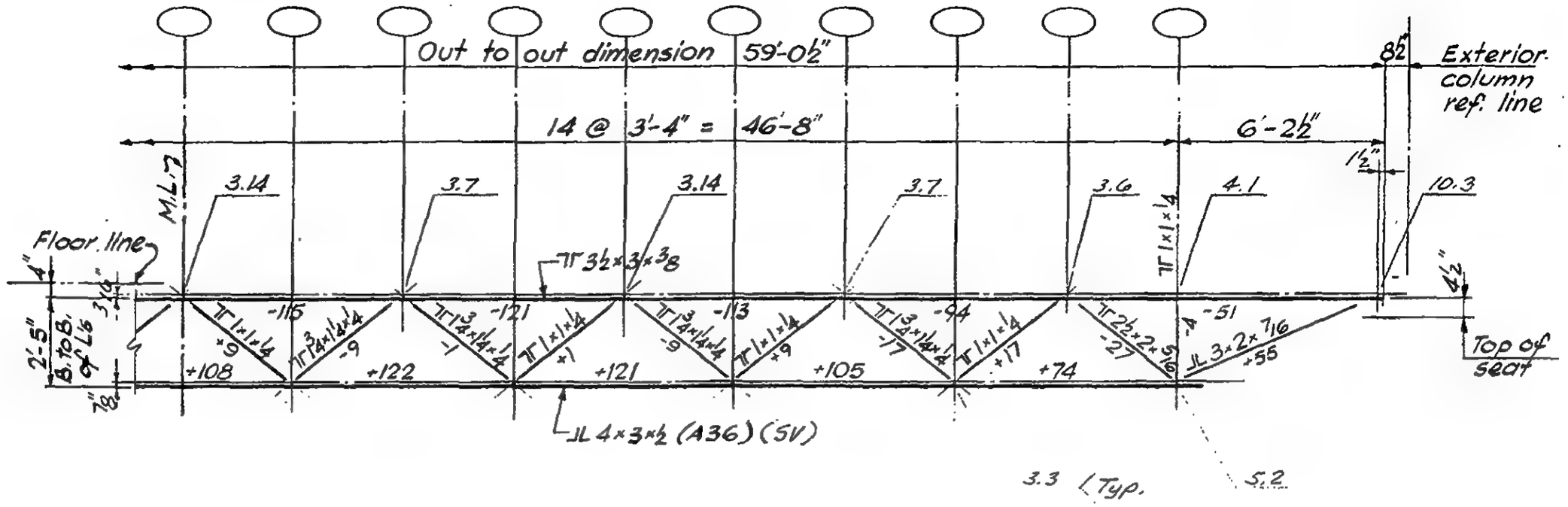

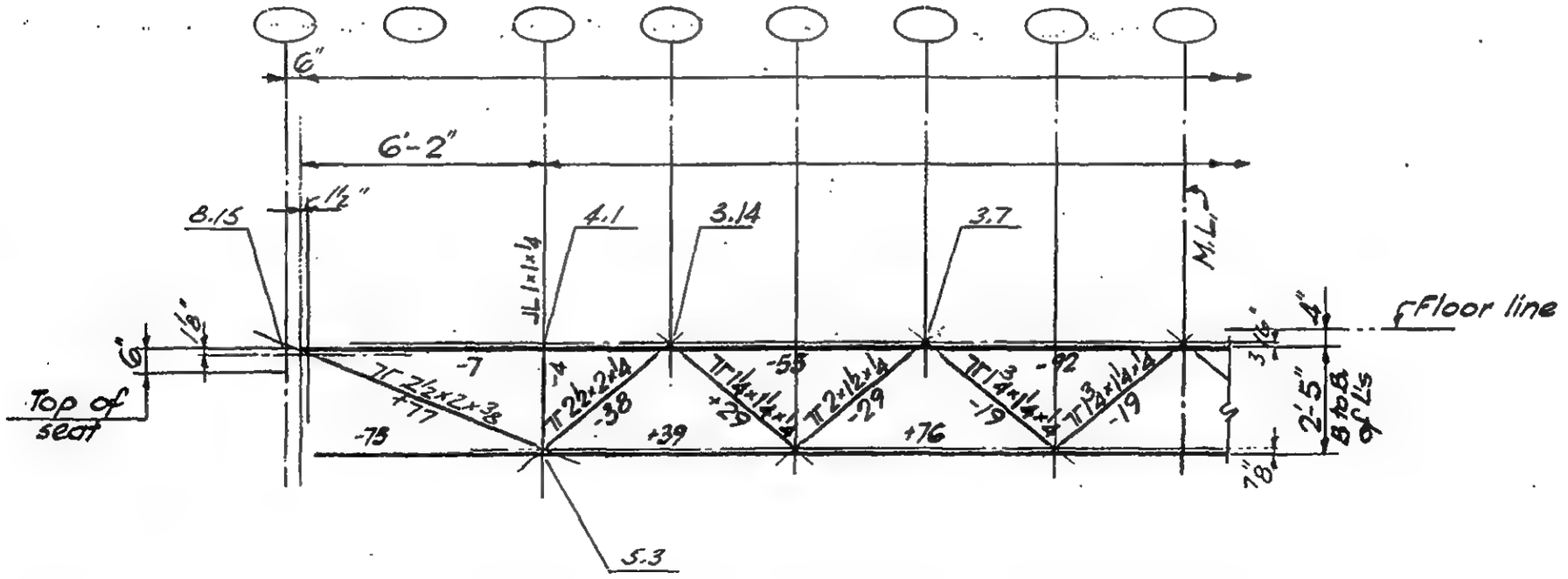

LICENSED PROFESSIONAL ENGINEER
LESLIE E. ROBERTSON
No. 34960
UNIVERSITY OF THE STATE OF NEW YORK

DESIGNED K. Hwang
DRAWN J. Gricius
REVIEWED W. Brewer

7-B7-13

SKILLING, HELLE, CHRISTIANSEN, ROBERTSON — Structural & Civil Engineers

PROJECT: THE WORLD TRADE CENTER | TITLE: FLOOR TRUSS 29T16 | DATE: 3-19-69

REVISIONS

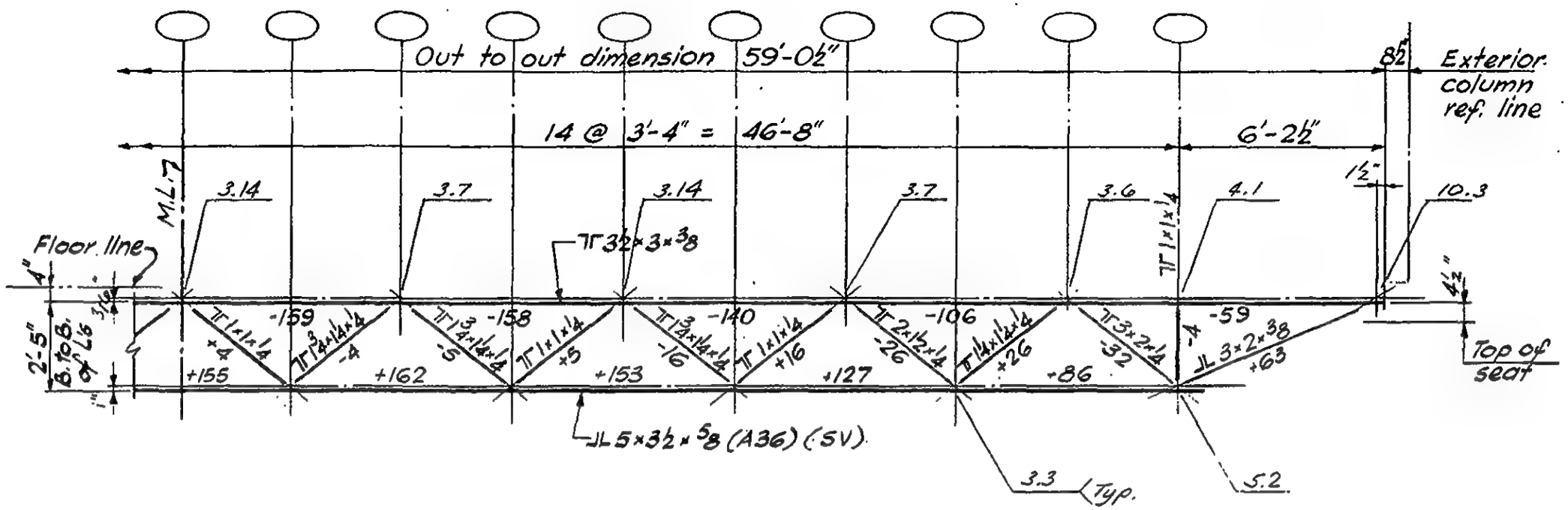

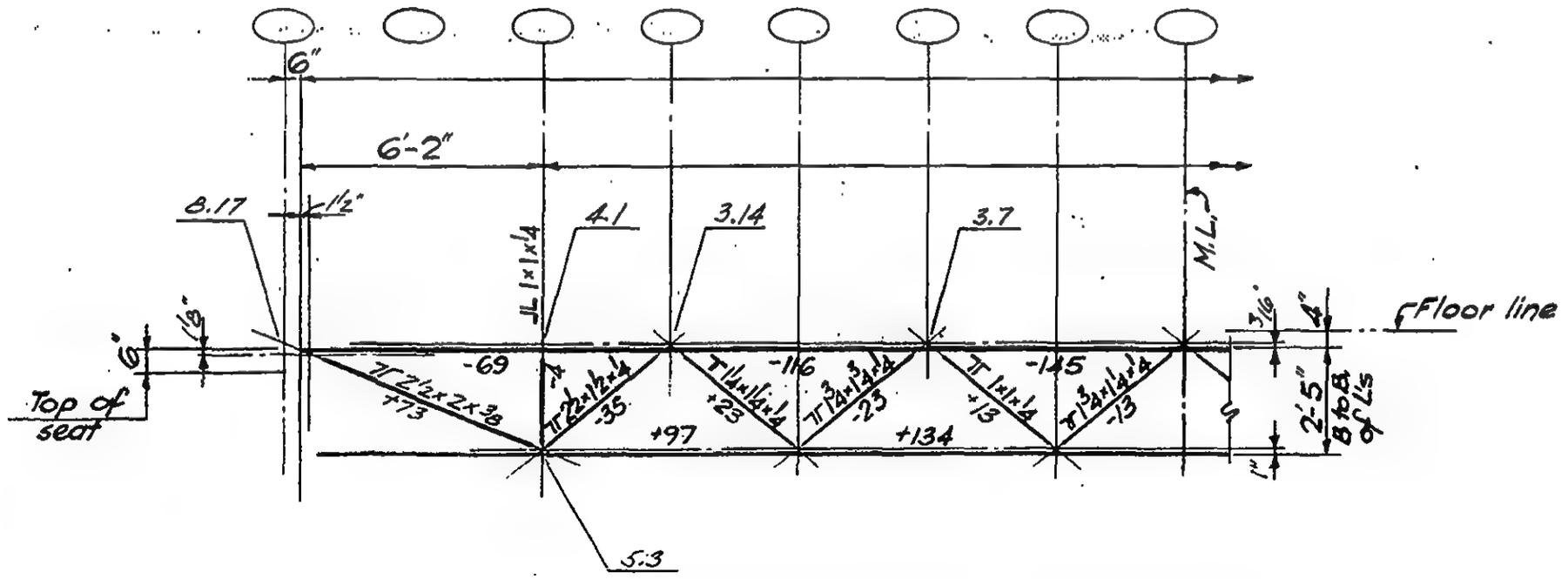

LICENSED PROFESSIONAL ENGINEER — LESLIE E. ROBERTSON — No. 34360 — UNIVERSITY OF THE STATE OF NEW YORK

DESIGNED K. Hwang

DRAWN J. Gricius

REVIEWED W. Brewer

7-B7-14

SKILLING, HELLE, CHRISTIANSEN, ROBERTSON — Structural & Civil Engineers

PROJECT: THE WORLD TRADE CENTER | TITLE: FLOOR TRUSS 29T17 | DATE: 3-19-69

REVISIONS

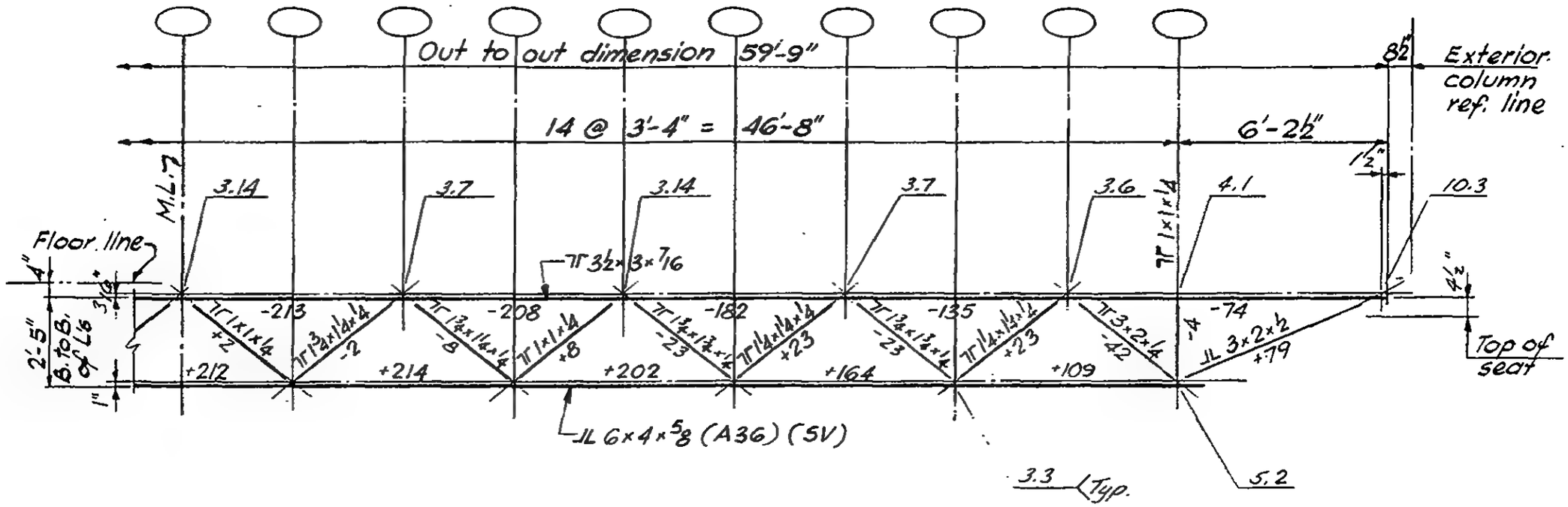

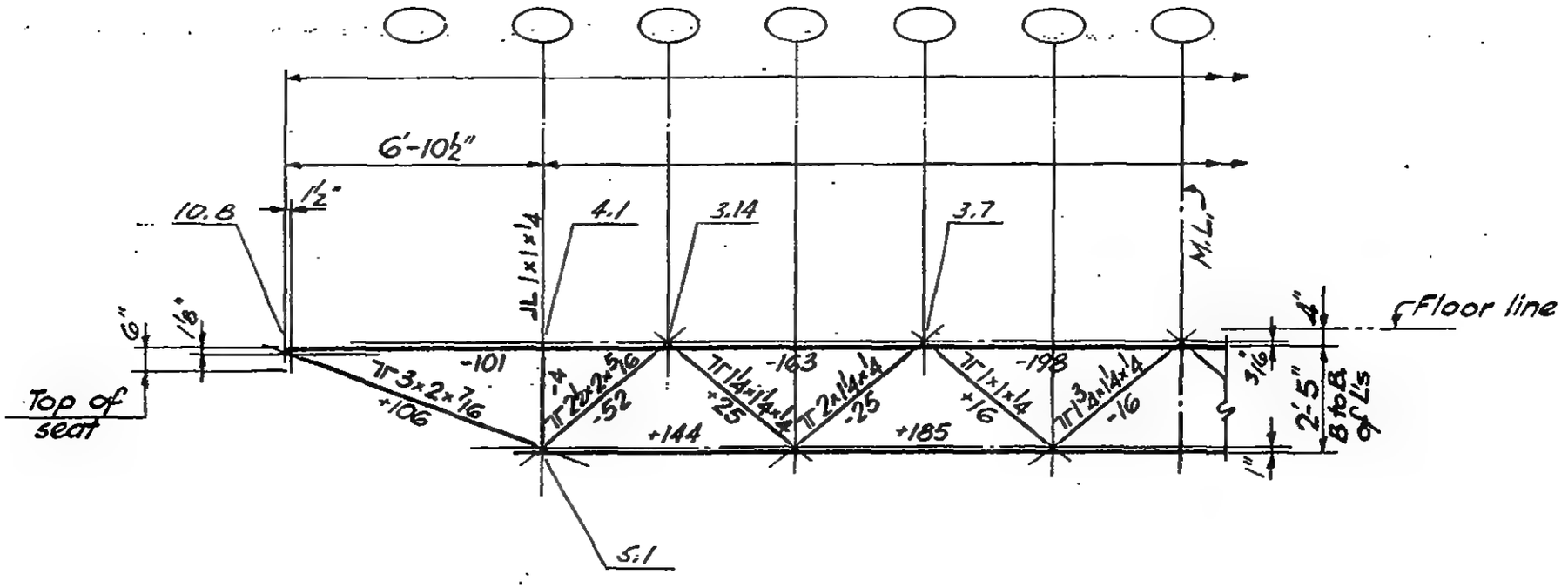

LICENSED PROFESSIONAL ENGINEER — LESLIE E. ROBERTSON — No. 34360 — UNIVERSITY OF THE STATE OF NEW YORK

DESIGNED K. Hwang

DRAWN J. Gricius

REVIEWED W. Brewer

7-B7-15

SKILLING, HELLE, CHRISTIANSEN, ROBERTSON — Structural & Civil Engineers

PROJECT: THE WORLD TRADE CENTER | TITLE: FLOOR TRUSS 29 T 18 | DATE: 3-19-69

REVISIONS

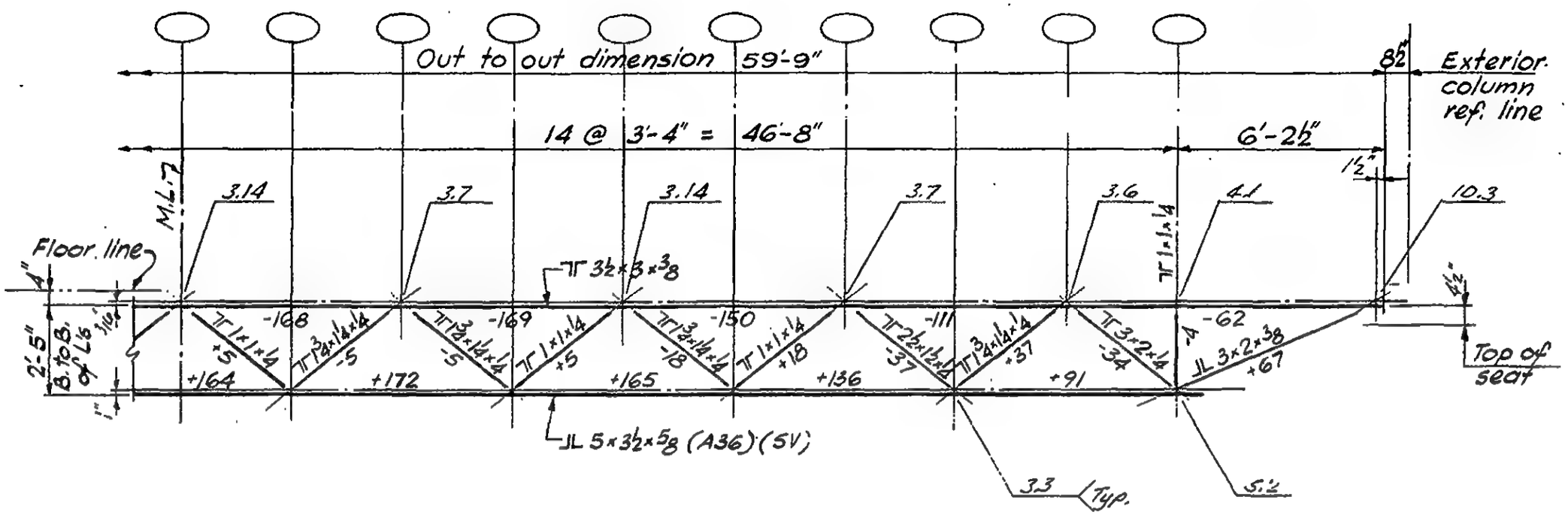

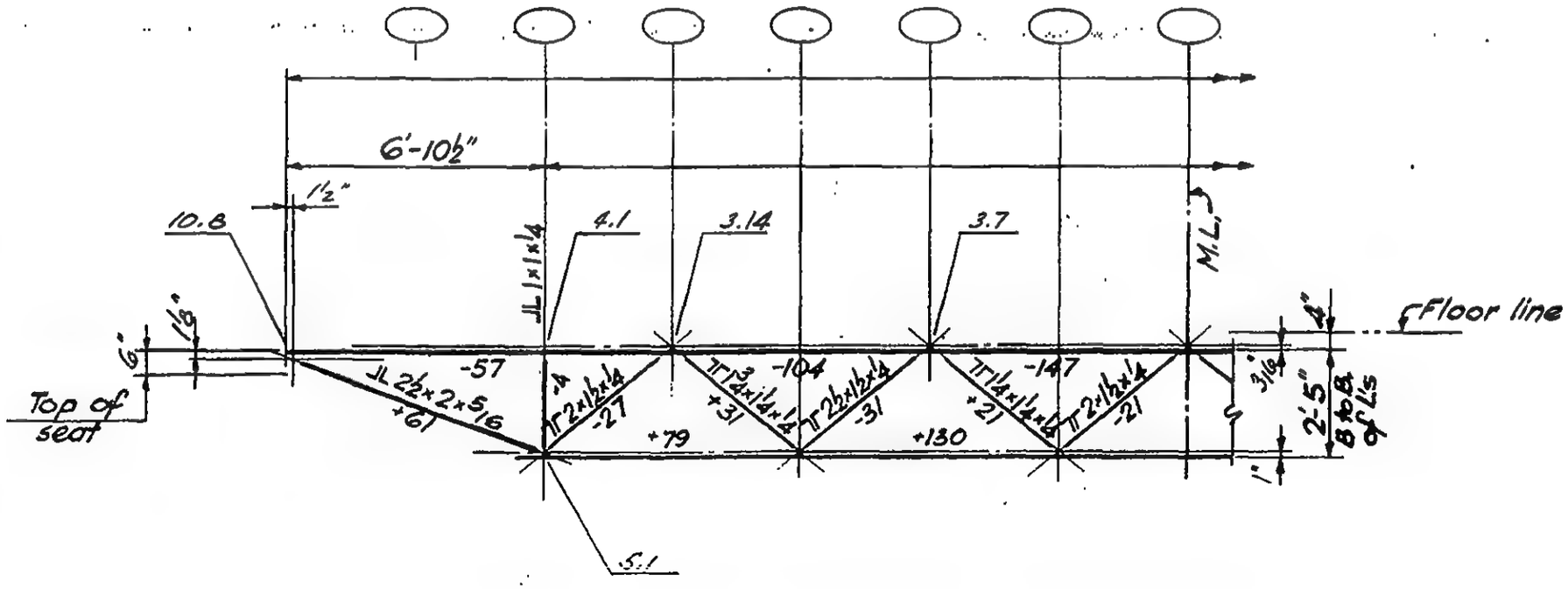

LICENSED PROFESSIONAL ENGINEER — LESLIE E. ROBERTSON — No. 34360 — UNIVERSITY OF THE STATE OF NEW YORK

DESIGNED K. Hwang

DRAWN J. Gricius

REVIEWED W. Brewer

7-B7-16

SKILLING, HELLE, CHRISTIANSEN, ROBERTSON — Structural & Civil Engineers

PROJECT: THE WORLD TRADE CENTER | TITLE: FLOOR TRUSS 29T19 | DATE: 3-19-69

REVISIONS

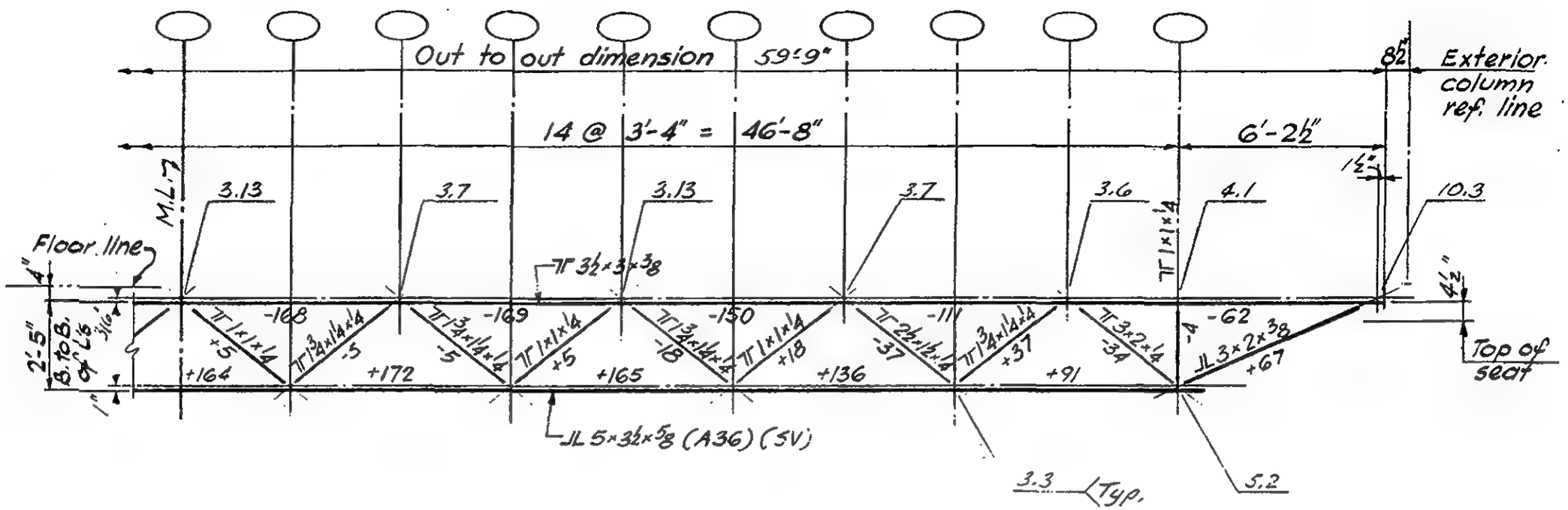

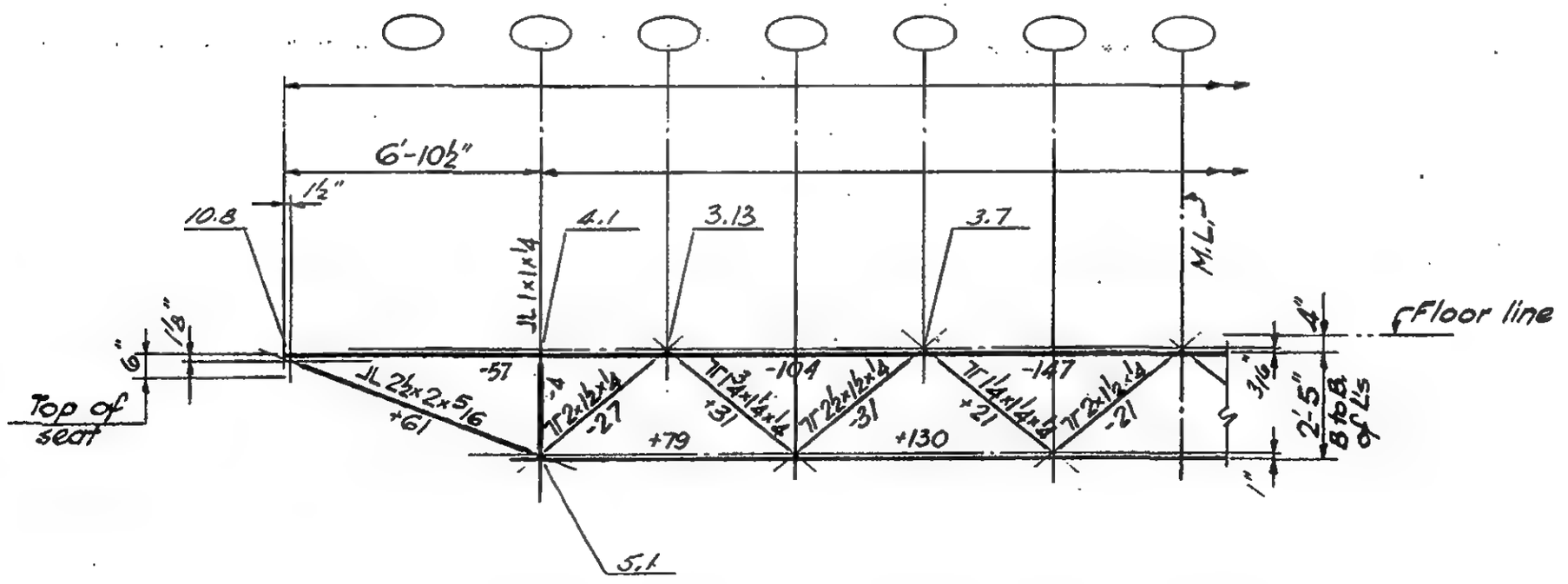

LICENSED PROFESSIONAL ENGINEER — LESLIE E. ROBERTSON — No. 34960 — UNIVERSITY OF THE STATE OF NEW YORK

DESIGNED K. Hwang

DRAWN J. Gricius

REVIEWED W. Brewer

7-B7-17

SKILLING, HELLE, CHRISTIANSEN, ROBERTSON — Structural & Civil Engineers

PROJECT: THE WORLD TRADE CENTER | TITLE: FLOOR TRUSS 29 T 20 | DATE: 3-19-69

REVISIONS

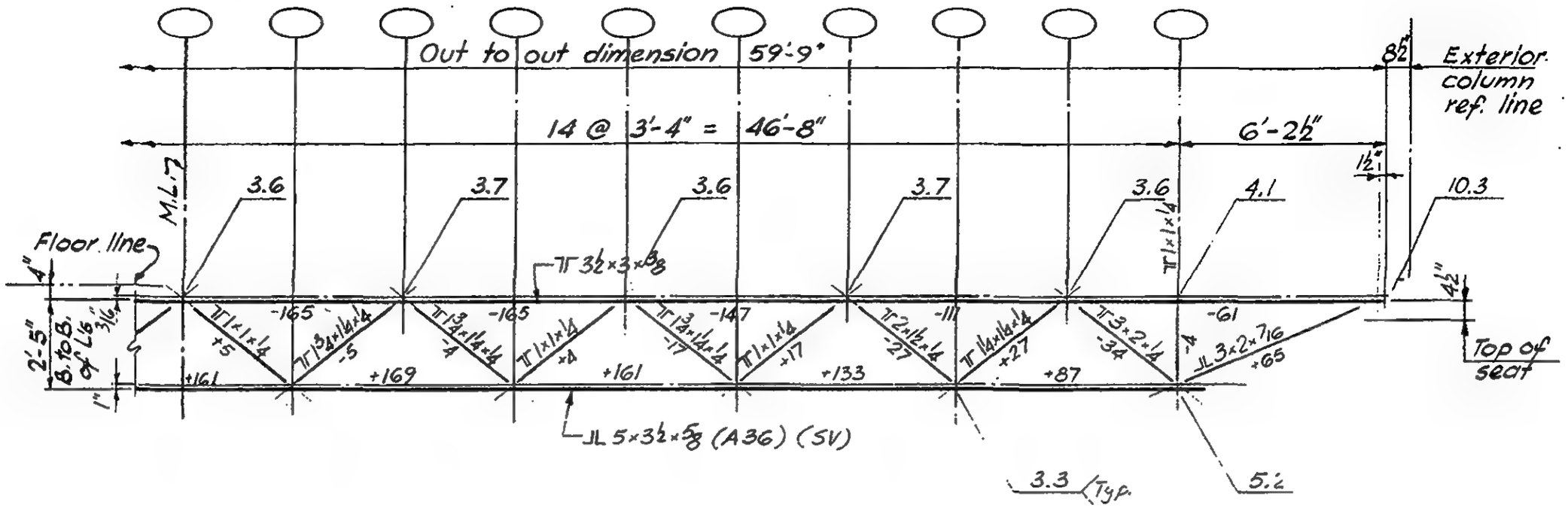

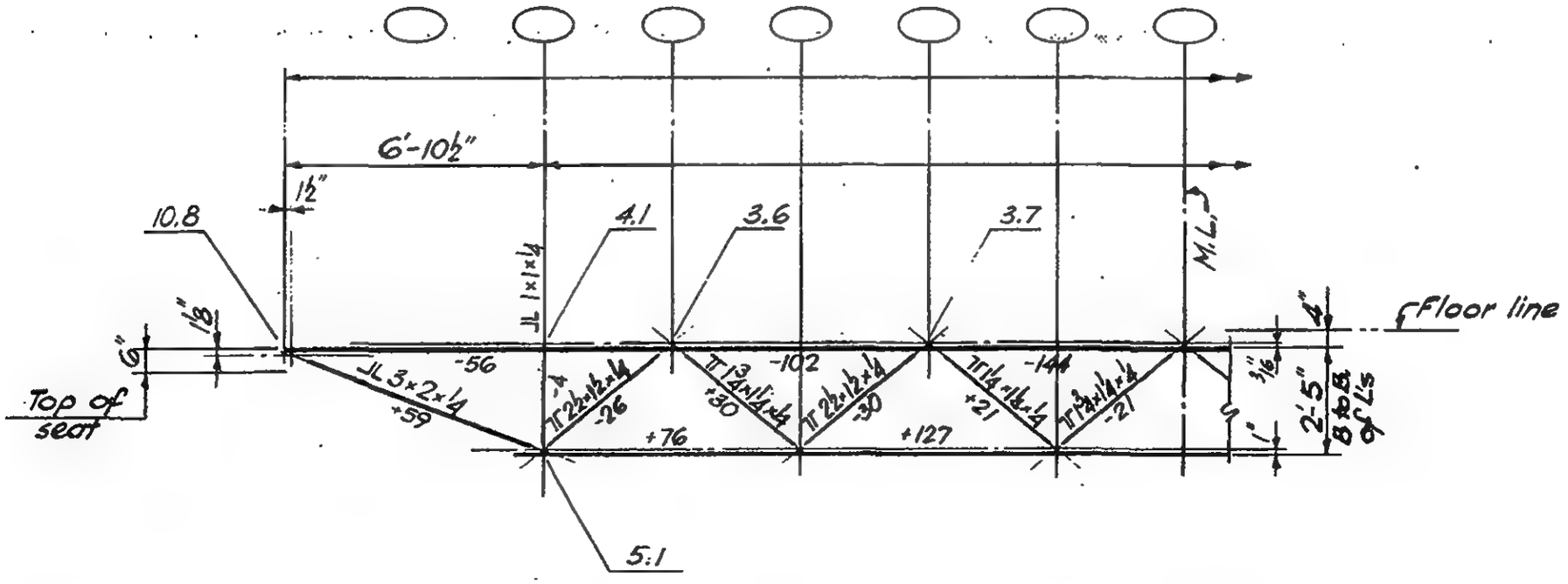

LICENSED PROFESSIONAL ENGINEER — LESLIE E. ROBERTSON — No. 34360 — UNIVERSITY OF THE STATE OF NEW YORK

DESIGNED K. Hwang

DRAWN J. Gricius

REVIEWED W. Brewer

7-B7-18

SKILLING, HELLE, CHRISTIANSEN, ROBERTSON — Structural & Civil Engineers

PROJECT: THE WORLD TRADE CENTER | TITLE: FLOOR TRUSS 29T21 & 29T22 | DATE: 3-19-69

REVISIONS

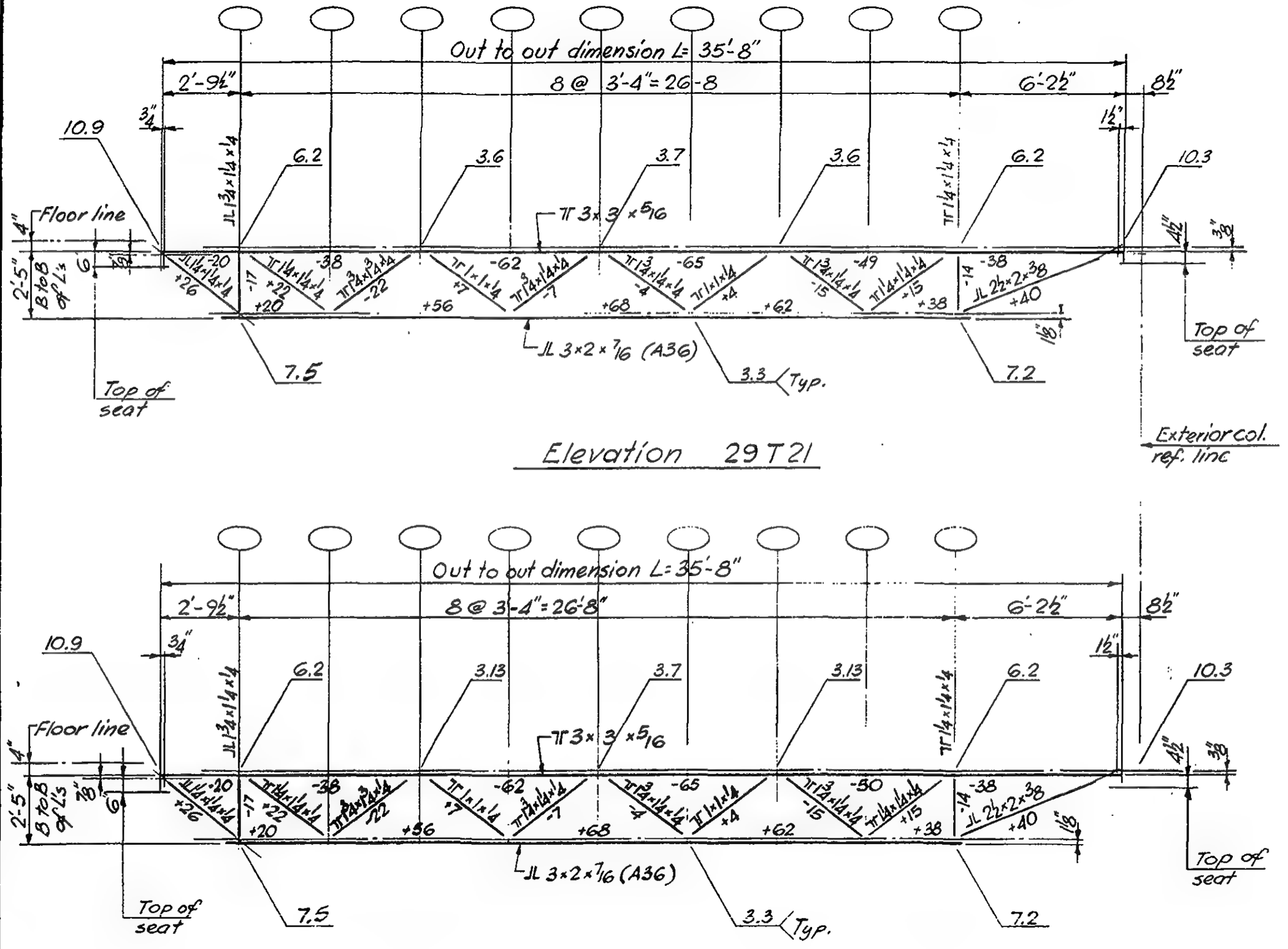

Elevation 29T21

Elevation 29T22

LICENSED PROFESSIONAL ENGINEER — LESLIE E. ROBERTSON — No. 34360 — UNIVERSITY OF THE STATE OF NEW YORK

DESIGNED K. Hwang

DRAWN J. Gricius

REVIEWED W. Brewer

7-B7-19

SKILLING, HELLE, CHRISTIANSEN, ROBERTSON — Structural & Civil Engineers

PROJECT: THE WORLD TRADE CENTER | TITLE: FLOOR TRUSS 29T23 & 29T24 | DATE: 3-19-69

REVISIONS

7-14-69

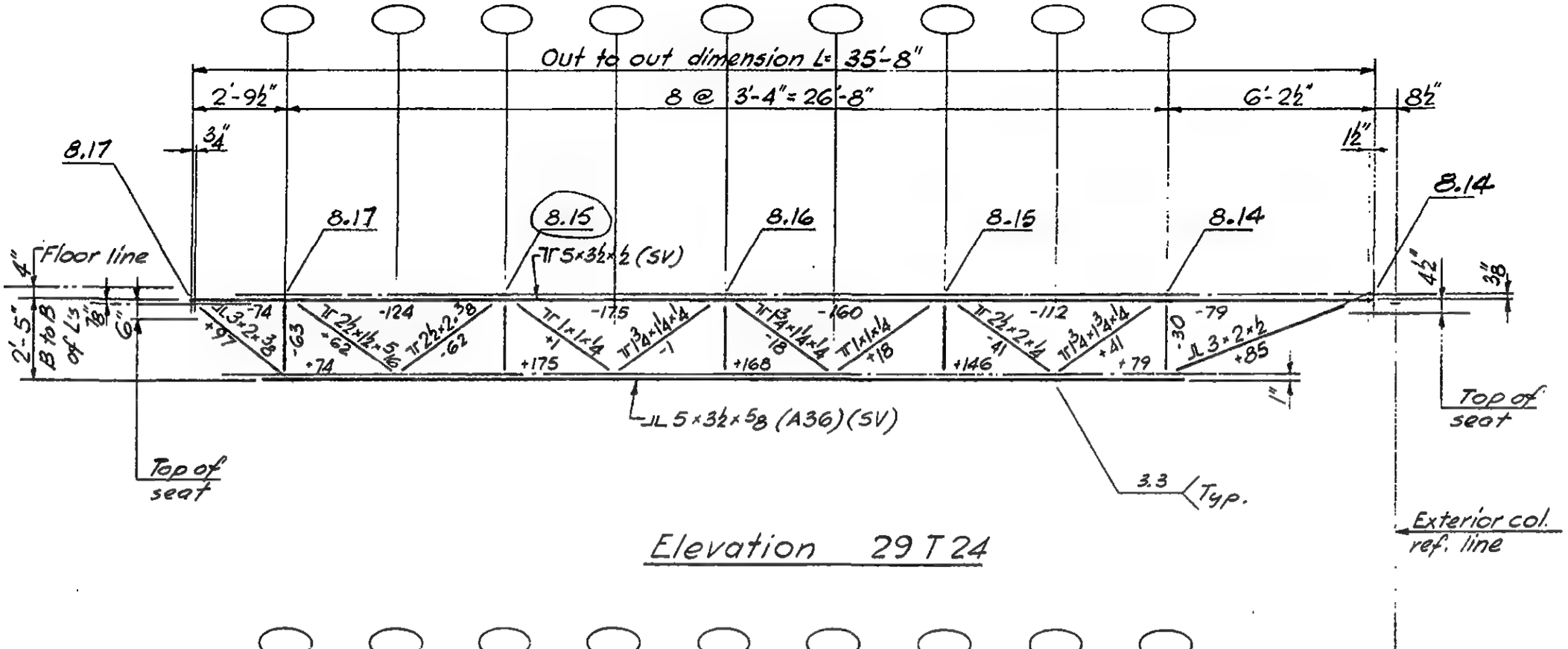

Elevation 29T24

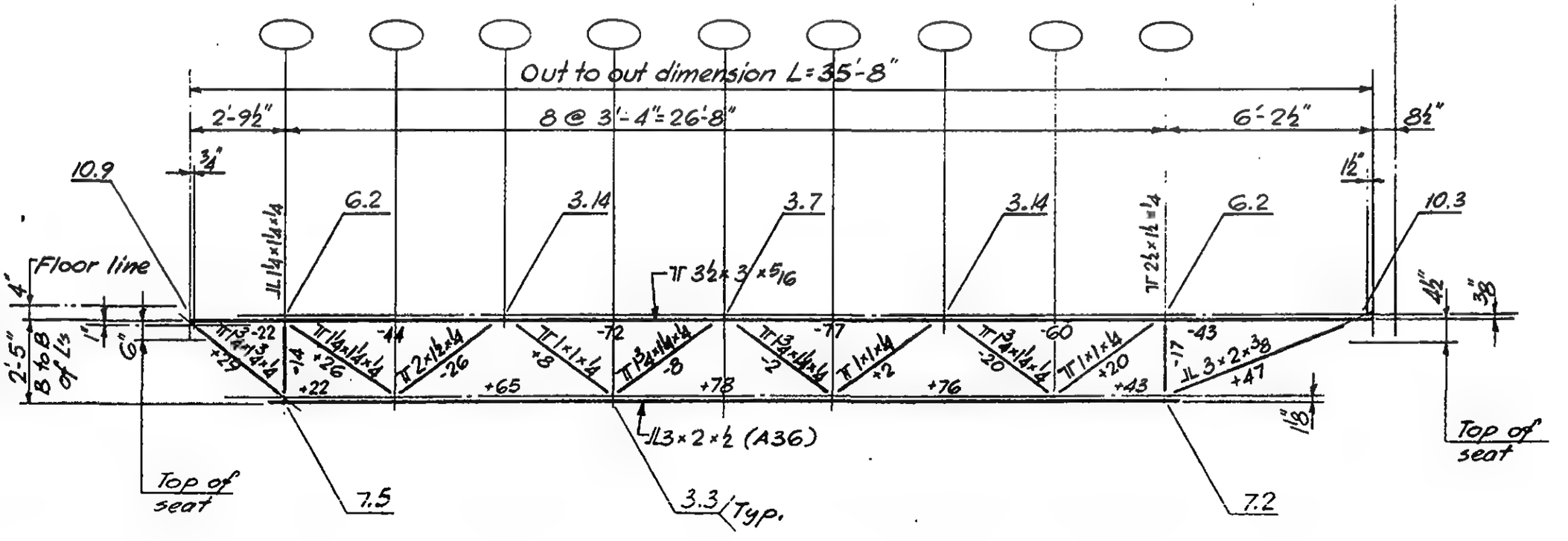

Elevation 29T23

LICENSED PROFESSIONAL ENGINEER — LESLIE E. ROBERTSON — No. 34360 — UNIVERSITY OF THE STATE OF NEW YORK

DESIGNED: K. Hwang

DRAWN: J. Gricius

REVIEWED: W. Blewer

7-B7-20

SKILLING, HELLE, CHRISTIANSEN, ROBERTSON — Structural & Civil Engineers

PROJECT: THE WORLD TRADE CENTER | TITLE: FLOOR TRUSS B1, B2, B3 & B4 | DATE: 3-19-69

REVISIONS

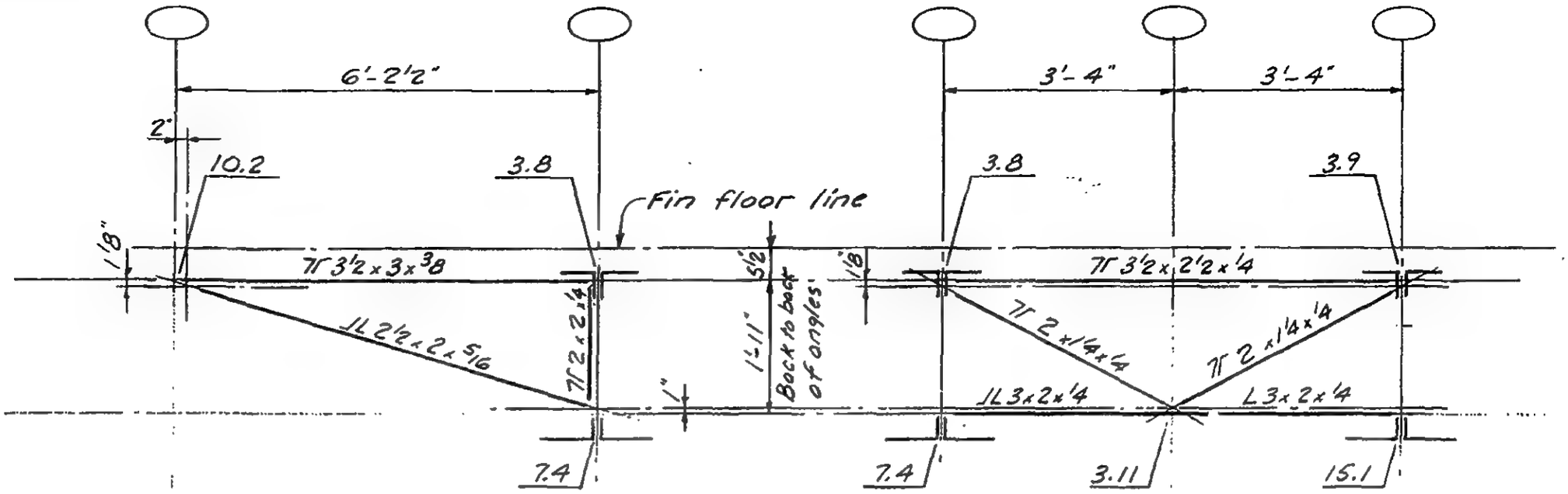

B1

B2

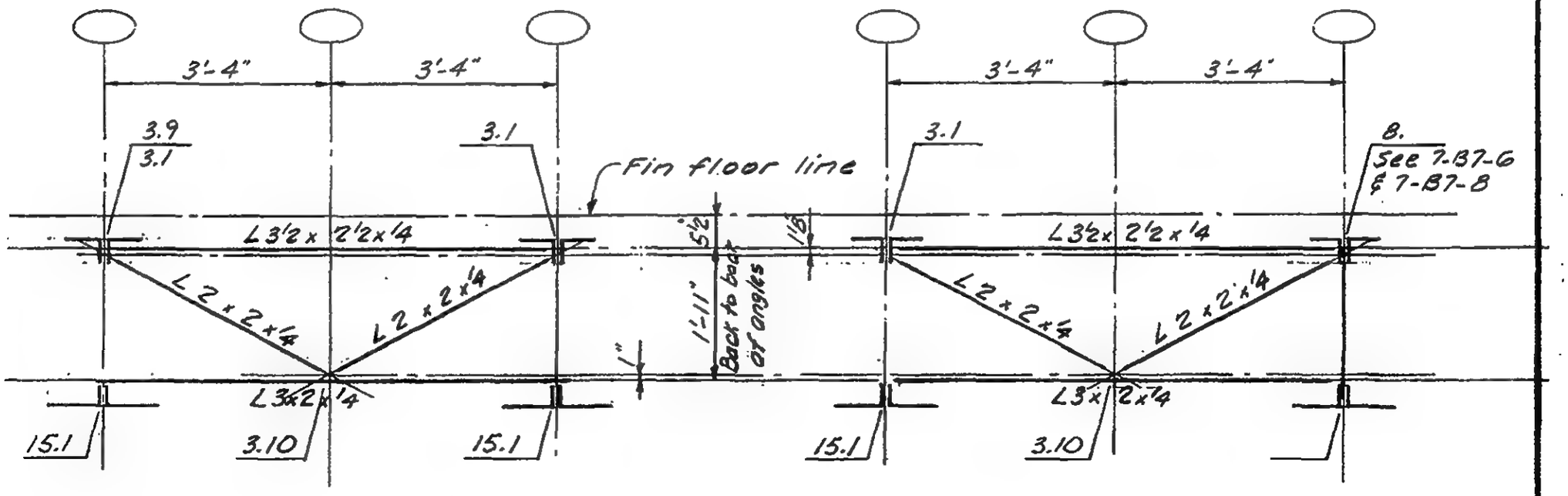

B3

B4

LICENSED PROFESSIONAL ENGINEER — LESLIE E. ROBERTSON — No. 34960 — UNIVERSITY OF THE STATE OF NEW YORK

DESIGNED: K. Hwang

DRAWN: A.L. FRANQUI

REVIEWED: W. Brewer

7-B7-21

SKILLING, HELLE, CHRISTIANSEN, ROBERTSON — Structural & Civil Engineers

PROJECT: THE WORLD TRADE CENTER | TITLE: FLOOR TRUSS B5, B6 & B7 | DATE: 3-19-69

REVISIONS

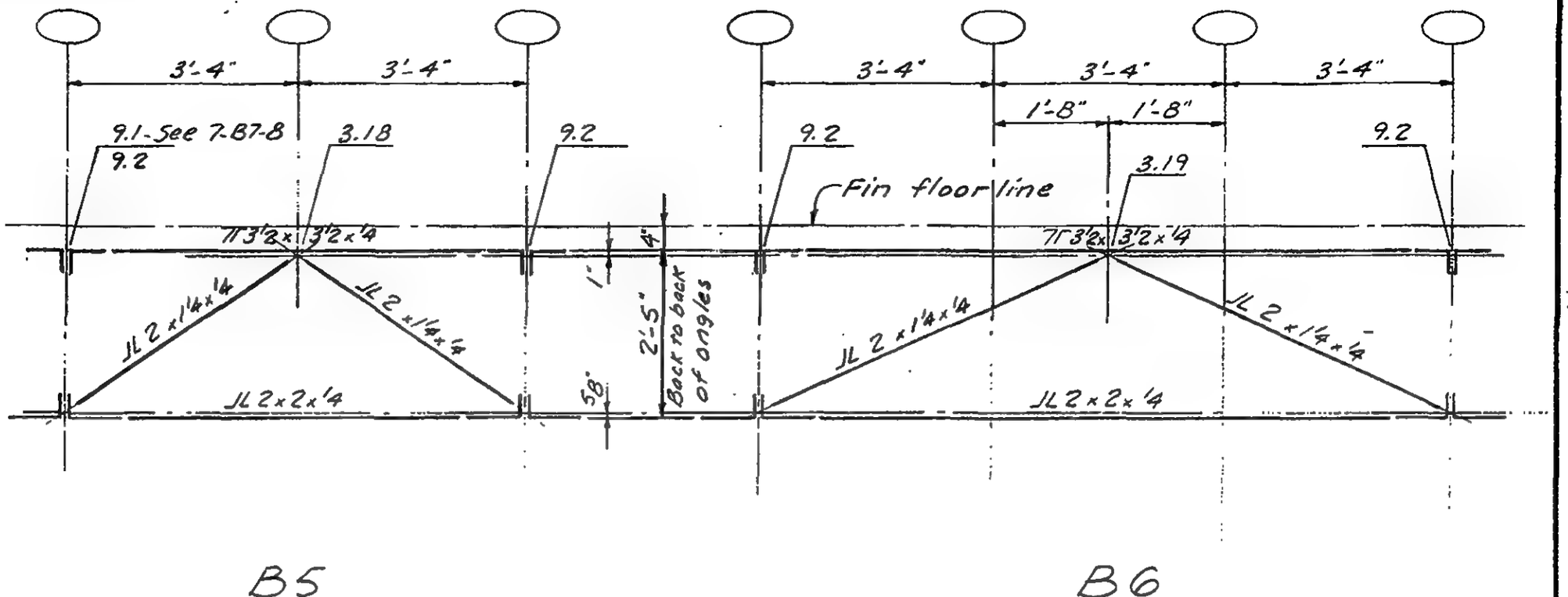

B5

B6

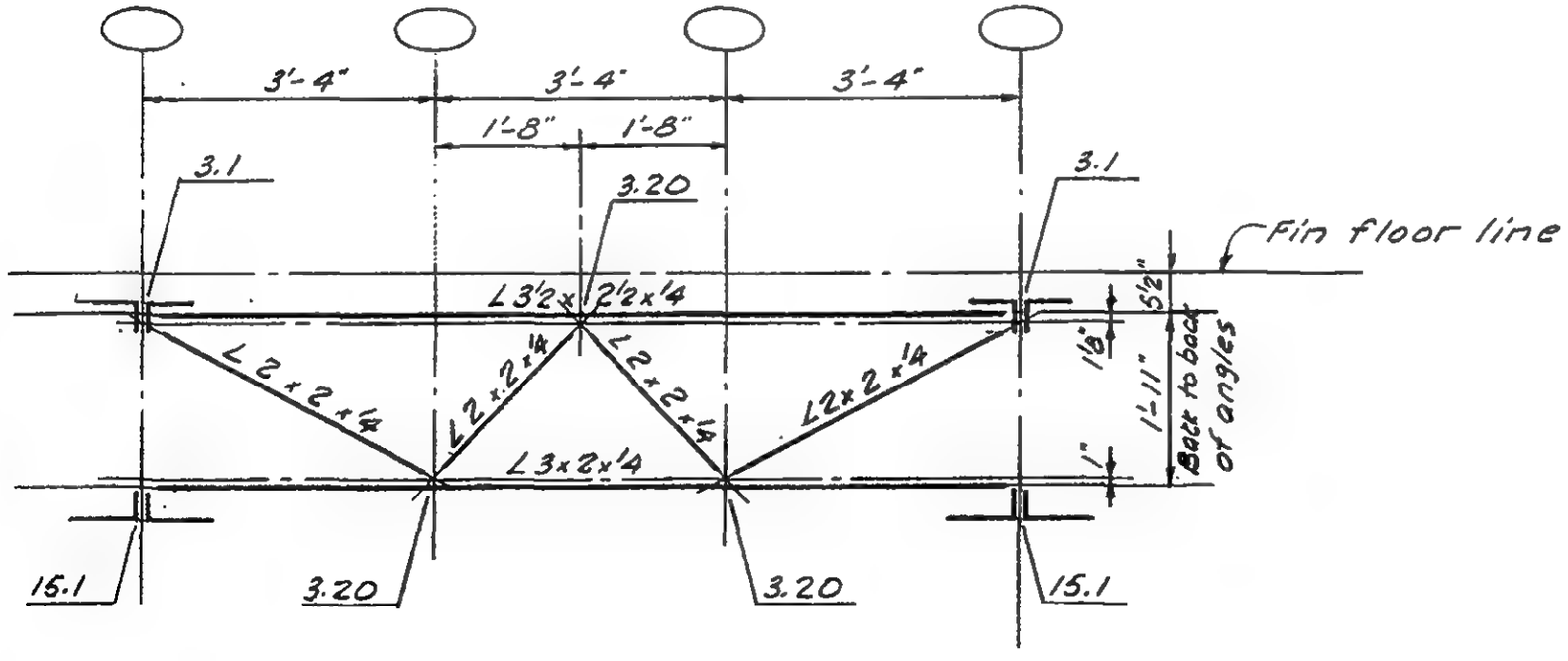

B7

LICENSED PROFESSIONAL ENGINEER — LESLIE E. ROBERTSON — No. 34960 — UNIVERSITY OF THE STATE OF NEW YORK

DESIGNED K. Hwang

DRAWN A.L. FRANQUI

REVIEWED W. Brewer

7-B7-22

SKILLING, HELLE, CHRISTIANSEN, ROBERTSON — Structural & Civil Engineers

PROJECT THE WORLD TRADE CENTER | TITLE FLOOR TRUSS B10, B11, B12 & B13 | DATE 3-19-69

REVISIONS

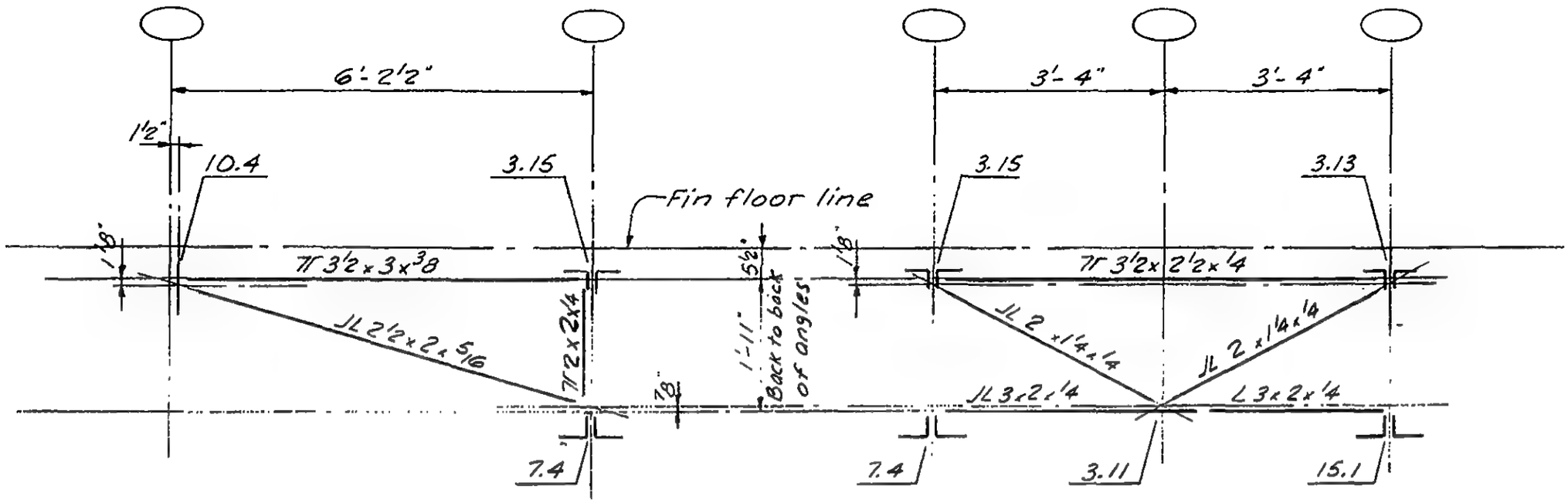

B10

B11

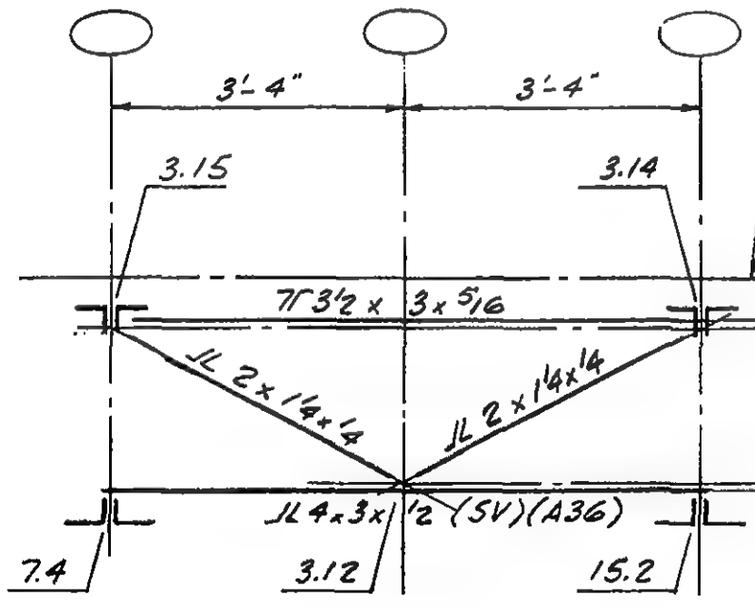

B12

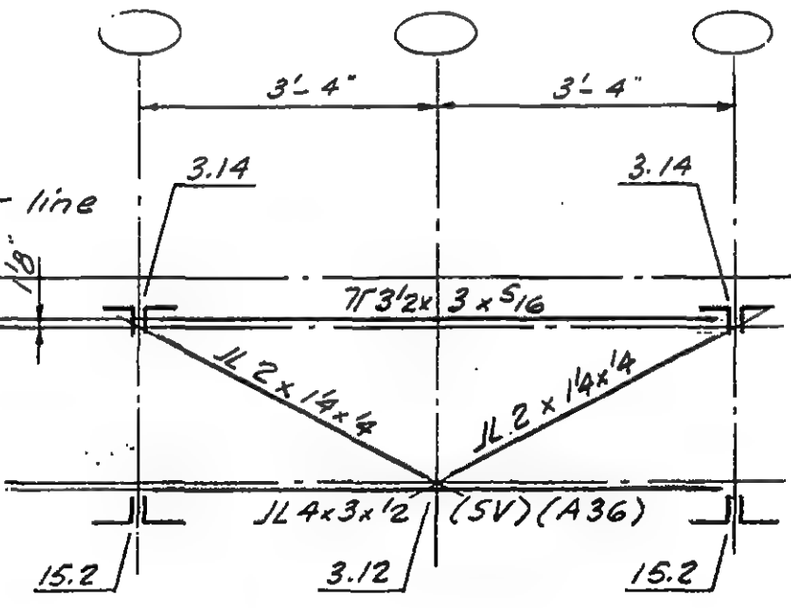

B13

LICENSED PROFESSIONAL ENGINEER — LESLIE E. ROBERTSON — No. 34360 — UNIVERSITY OF THE STATE OF NEW YORK

DESIGNED K. Hwang

DRAWN A.L. FRANQUI

REVIEWED W. Brewer

7-B7-23

SKILLING, HELLE, CHRISTIANSEN, ROBERTSON — Structural & Civil Engineers

PROJECT: THE WORLD TRADE CENTER | TITLE: FLOOR TRUSS B14, B15, B16 & B17 | DATE: 3-19-69

REVISIONS

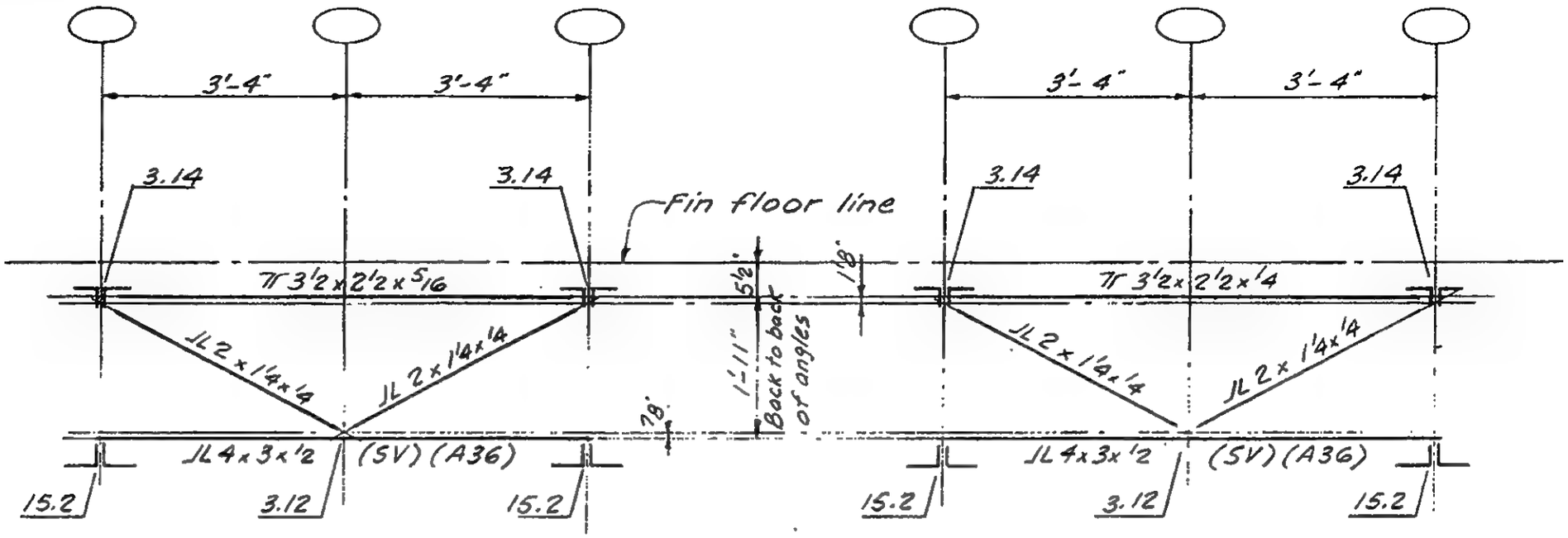

B14

B15

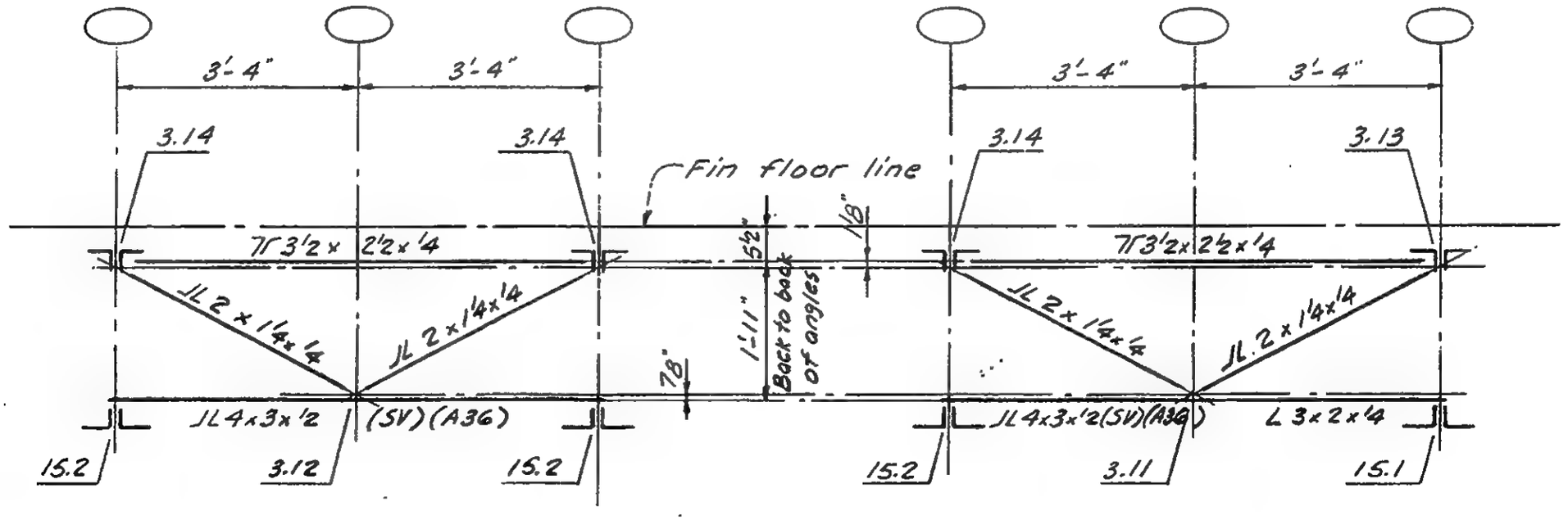

B16

B17

LICENSED PROFESSIONAL ENGINEER — LESLIE E. ROBERTSON — No. 34360 — UNIVERSITY OF THE STATE OF NEW YORK

DESIGNED: K. Hwang
DRAWN: A.L. FRANQUI
REVIEWED: W. Brewer

7-B7-24

SKILLING, HELLE, CHRISTIANSEN, ROBERTSON — Structural & Civil Engineers

PROJECT THE WORLD TRADE CENTER | TITLE FLOOR TRUSS B18, B19 & B20 | DATE 3-19-69

REVISIONS

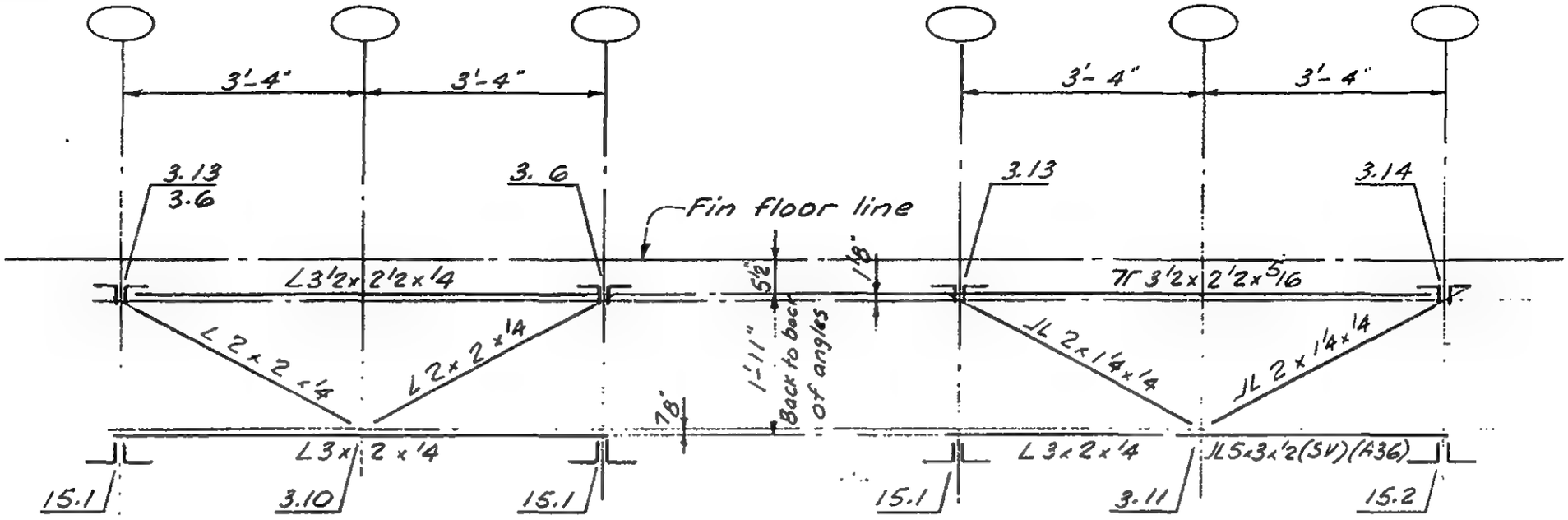

B18

B19

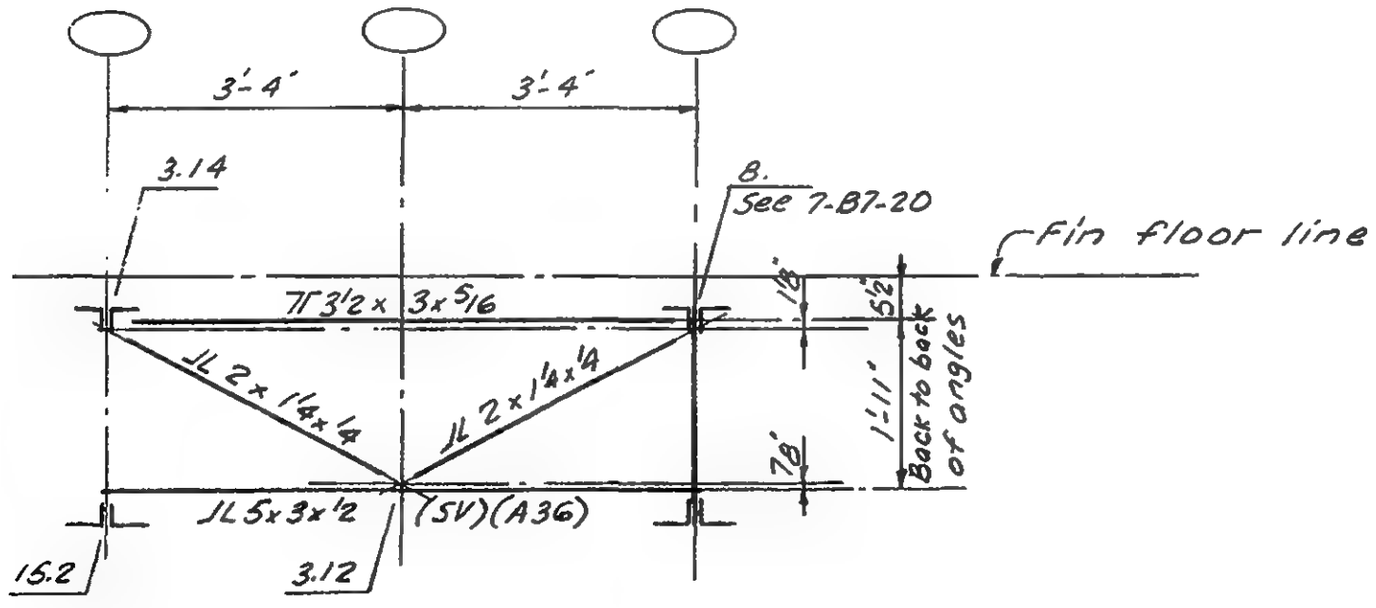

B20

LICENSED PROFESSIONAL ENGINEER
LESLIE E. ROBERTSON
No. 34360
UNIVERSITY OF THE STATE OF NEW YORK

DESIGNED K. Hwang
DRAWN A.L. FRANQUI
REVIEWED W. Brewer

7-B7-25

SKILLING, HELLE, CHRISTIANSEN, ROBERTSON — Structural & Civil Engineers

PROJECT THE WORLD TRADE CENTER | TITLE FLOOR TRUSS CAMBER DIAGRAMS | DATE 3-19-69

REVISIONS

4-21-69

5-13-69

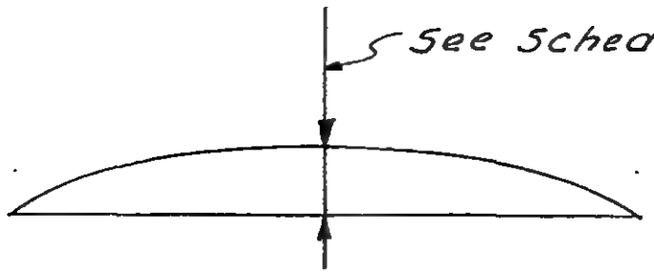

CAMBER DIAGRAM

Camber Schedule	
Truss No.	Camber at Mid span (in)
29T1	1 7/8
29T2	1 15/16
29T3	2 1/16
29T4	2 1/8
29T5	1
29T6	1 1/16
29T7	13/16
29T8	5/8
29T9	1/16
29T10	13/16
29T11	7/8
29T12	1/2
29T13	13/16
29T14	1
29T15	1 1/2
29T16	1 11/16
29T17	2 1/16
29T18	2
29T19	2 1/8
29T20	2 1/16
29T21	1/2
29T22	1/2
29T23	5/8
29T24	11/16

LICENSED PROFESSIONAL ENGINEER
LESLIE E. ROBERTSON
No. 34360
UNIVERSITY OF THE STATE OF NEW YORK

DESIGNED

DRAWN
A.L.FRANQUI

REVIEWED

7-B7-26

SKILLING, HELLE, CHRISTIANSEN, ROBERTSON — Structural & Civil Engineers

PROJECT THE WORLD TRADE CENTER | TITLE FLOOR TRUSS DETAILS - INDEX | DATE 3-19-69

REVISIONS

4-1-69

Printed 5-1-69

7-B8-1	INDEX
7-B8-2	TYPICAL LACING DETAIL
7-B8-3.1	DETAIL 3.1
7-B8-3.2	DETAIL 3.2, 3.3
7-B8-3.3	DETAIL 3.4, 3.5
7-B8-3.4	DETAIL 3.6
7-B8-3.5	DETAIL 3.7
7-B8-3.6	DETAIL 3.8
7-B8-3.7	DETAIL 3.9
7-B8-3.8	DETAIL 3.10, 3.11
7-B8-3.9	DETAIL 3.12
7-B8-3.10	DETAIL 3.13
7-B8-3.11	DETAIL 3.14
7-B8-3.12	DETAIL 3.15
7-B8-3.13	DETAIL 3.16
7-B8-3.14	DETAIL 3.17
7-B8-3.15	DETAIL 3.18, 3.19
7-B8-3.16	DETAIL 3.20
7-B8-4.1	DETAIL 4.1, 4.2, 4.3
7-B8-4.2	DETAIL 4.4
7-B8-4.3	DETAIL 4.5
7-B8-4.4	DETAIL 4.6
7-B8-5.1	DETAIL 5.1
7-B8-5.2	DETAIL 5.2
7-B8-5.3	DETAIL 5.3
7-B8-6.1	DETAIL 6.1
7-B8-6.2	DETAIL 6.2, 6.3
7-B8-7.1	DETAIL 7.1, 7.3, 7.5
7-B8-7.2	DETAIL 7.2
7-B8-7.3	DETAIL 7.4
7-B8-8.1	DETAIL 8.1
7-B8-8.2	DETAIL 8.2
7-B8-8.3	DETAIL 8.3
7-B8-8.4	DETAIL 8.4
7-B8-8.5	DETAIL 8.5
7-B8-8.6	DETAIL 8.6
7-B8-8.7	DETAIL 8.7
7-B8-8.8	DETAIL 8.8
7-B8-8.9	DETAIL 8.9
7-B8-8.10	DET. 8 SECT A, B
7-B8-8.11	DETAIL 8.10
7-B8-8.12	DETAIL 8.11, 8.12
7-B8-8.13	DETAIL 8.13
7-B8-8.14	DET. 8 SECT. C-G
7-B8-8.15	DET. 8 SECT. H, J
7-B8-8.16	DETAIL 8.14
7-B8-8.17	DETAIL 8.15, 8.16
7-B8-8.18	DETAIL 8.17
7-B8-8.19	DET. 8 SECT. H-L
7-B8-8.20	DET. 8 SECT. M-N
7-B8-9.1	DETAIL 9.1
7-B8-10.1	DETAIL 10.1
7-B8-10.2	DETAIL 10.2
7-B8-10.3	DETAIL 10.3
7-B8-10.4	DETAIL 10.4
7-B8-10.5	DETAIL 10.5
7-B8-10.6	DETAIL 10.6
7-B8-10.7	DETAIL 10.7
7-B8-10.8	DETAIL 10.8
7-B8-10.9	DETAIL 10.9
7-B8-11	NOT USED
7-B8-12.1	DETAIL 12.1-.5 & .9, .10
7-B8-12.2	DETAIL 12.1- 12.11
7-B8-12.3	DETAIL 12.6 & 12.7
7-B8-12.4	DETAIL 12.8 & 12.11
7-B8-12.5	DETAIL 12.12
7-B8-13.1	DETAIL 13.1
7-B8-13.2	DETAIL 13.2 & 13.4
7-B8-13.3	DETAIL 13.3
7-B8-14.1	DETAIL 14.1
7-B8-15.1	DETAIL 15.1
7-B8-15.2	DETAIL 15.2
7-B8-16.1	DETAIL 16.1-16.6

LICENSED PROFESSIONAL ENGINEER LESLIE E. ROBERTSON No. 34360 UNIVERSITY OF THE STATE OF NEW YORK

DESIGNED

DRAWN

REVIEWED

7-B8-1

SKILLING, HELLE, CHRISTIANSEN, ROBERTSON — Structural & Civil Engineers

PROJECT: THE WORLD TRADE CENTER | TITLE: FLOOR TRUSS DETAIL - TYPICAL LACING | DATE: 3-19-69

REVISIONS

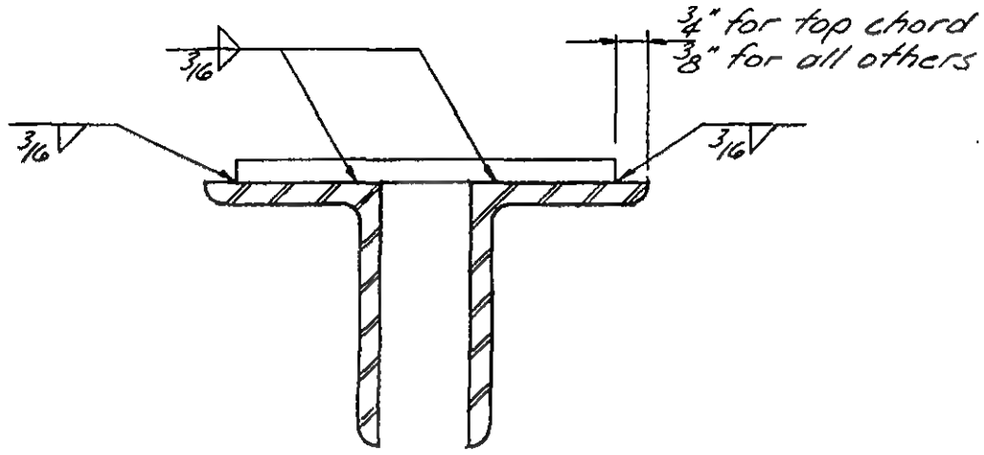

Section a-a

Note:
Lacing detail applies to all double angle compression members
Lacing bar required at mid-point of each panel, except for the following member sizes where lacing bar is required at 1/3 point, each panel.
- 7L 2x1¼
- 7L 2½x1½
- 7L 3x2

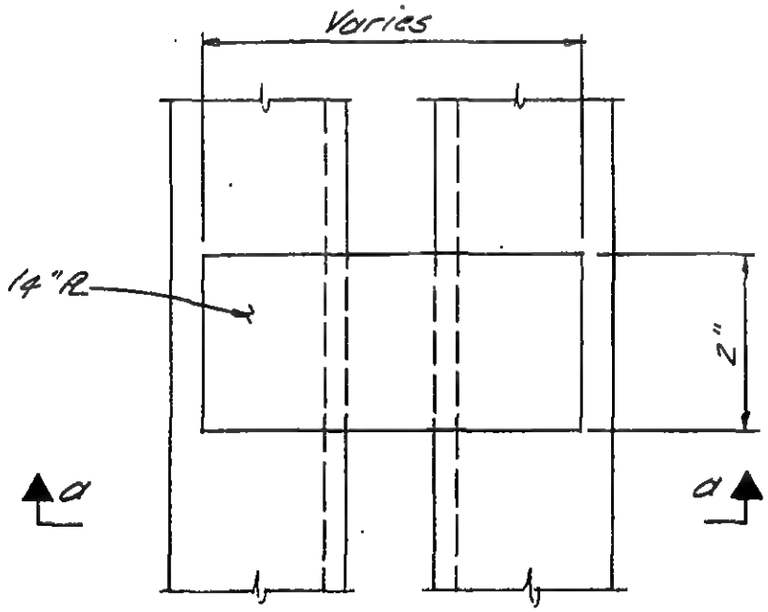

Plan

TYPICAL LACING DETAIL FOR JL COMPRESSION MEMBERS

LICENSED PROFESSIONAL ENGINEER — LESLIE E. ROBERTSON — No. 34960 — UNIVERSITY OF THE STATE OF NEW YORK

DESIGNED

DRAWN J. Adams

REVIEWED W. Brewer

7-88-2

SKILLING, HELLE, CHRISTIANSEN, ROBERTSON — Structural & Civil Engineers

PROJECT: THE WORLD TRADE CENTER | TITLE: FLOOR TRUSS DETAIL 3.1 | DATE: 3-19-69

REVISIONS

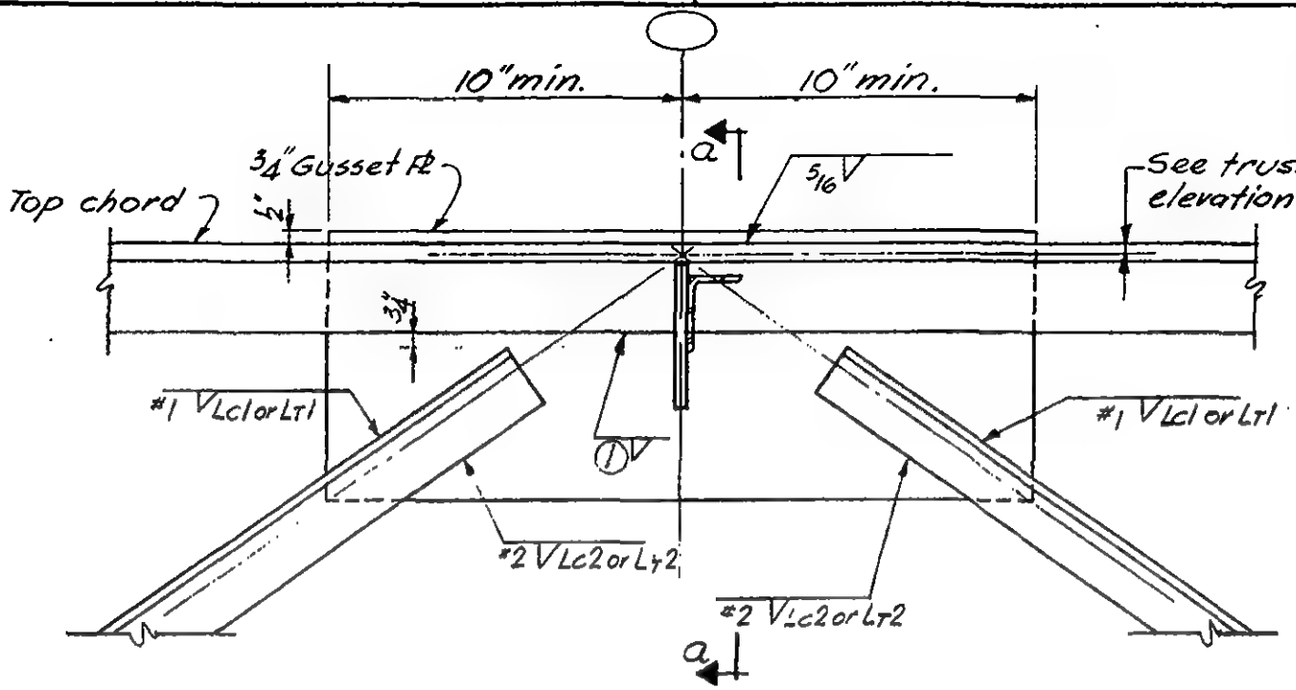

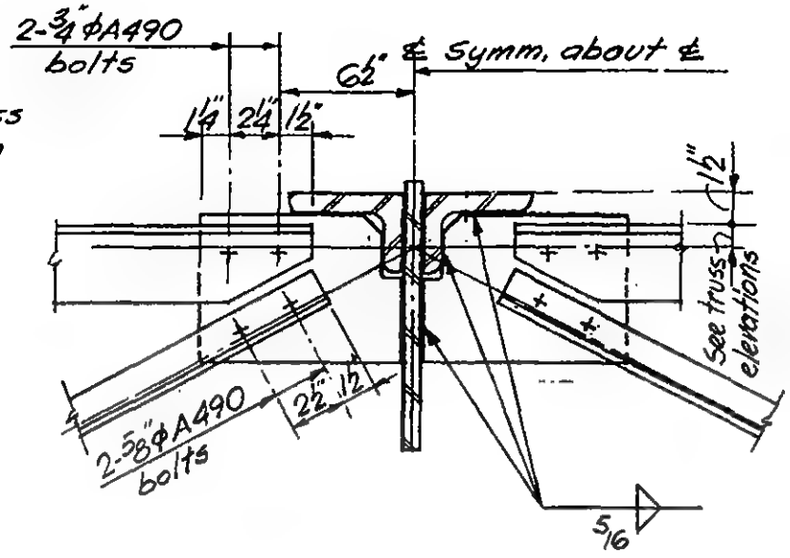

Section a-a

Diagonal member size	Compression				Tension			
	Weld #1	Lc1	Weld #2	Lc2	Weld #1	Lt1	Weld #2	Lt2
1 × 1 × 1/4	—	—	—	—	1/4	6	3/16	4
1¼ × 1¼ × 1/4	—	—	—	—	1/4	6	3/16	4
1¾ × 1¼ × 1/4	1/4	6	3/16	4	1/4	6	3/16	4
1¾ × 1¾ × 1/4	1/4	6	3/16	4	5/16	6	3/16	4
2 × 1½ × 1/4	1/4	6	3/16	4	—	—	—	—
2½ × 1½ × 1/4	1/4	6	3/16	4	1/4	7	3/16	5
2½ × 2 × 1/4	1/4	6	3/16	4	5/16	7	3/16	5
2½ × 1½ × 5/16	1/4	6	1/4	4	5/16	7	1/4	5
2½ × 2 × 5/16	5/16	6	1/4	4	3/8	7	1/4	5
2½ × 2 × 3/8	5/16	7	1/4	5	5/16	9	1/4	6
3 × 2 × 1/4	5/16	7	3/16	5	—	—	—	—
3 × 2 × 3/8	3/8	7	5/16	5	3/8	9	5/16	6
3 × 2 × 7/16	5/16	9	5/16	6	—	—	—	—
3 × 2 × 1/2	3/8	9	5/16	6	7/16	9	3/8	6
3 × 2½ × 1/2	7/16	9	5/16	6	—	—	—	—

Note ① 1/4" for Tr ≤ to 3/4" thick
5/16" for Tr > than 3/4" thick

See 7-B7 for truss elevations.

LICENSED PROFESSIONAL ENGINEER — LESLIE E. ROBERTSON — No. 34960 — UNIVERSITY OF THE STATE OF NEW YORK

DESIGNED K. Hwang
DRAWN J. Gricius
REVIEWED W. Brewer

7-B8-3.1

SKILLING, HELLE, CHRISTIANSEN, ROBERTSON — Structural & Civil Engineers

PROJECT THE WORLD TRADE CENTER | TITLE FLOOR TRUSS DETAIL 3.2, 3.3 | DATE 3-19-69

REVISIONS

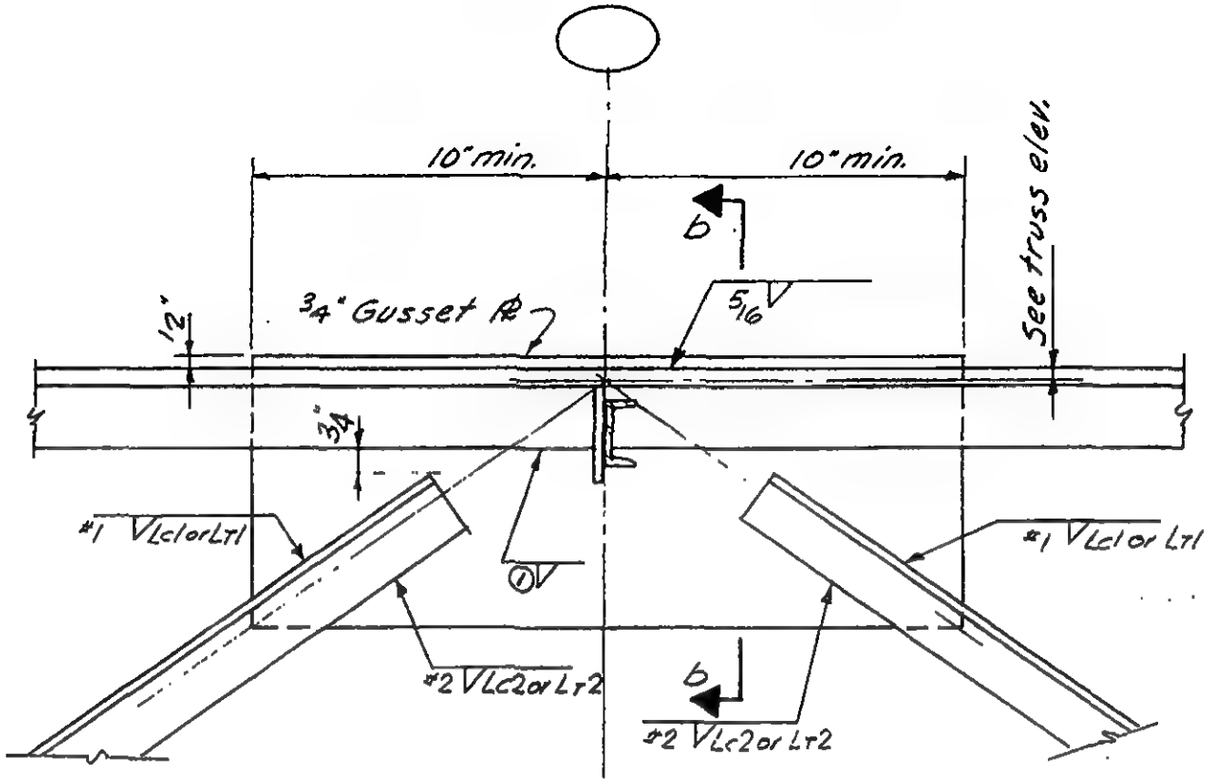

DETAIL 3.2

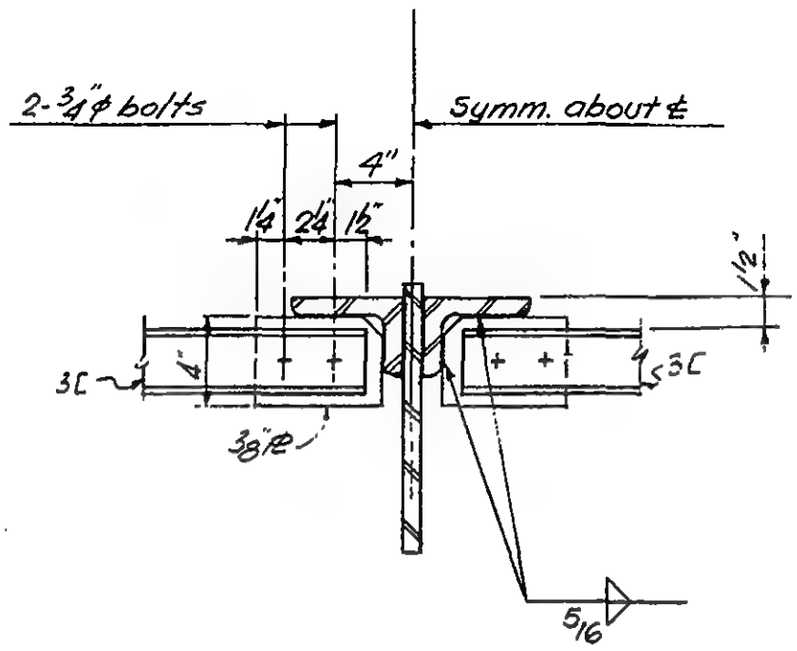

Section b-b

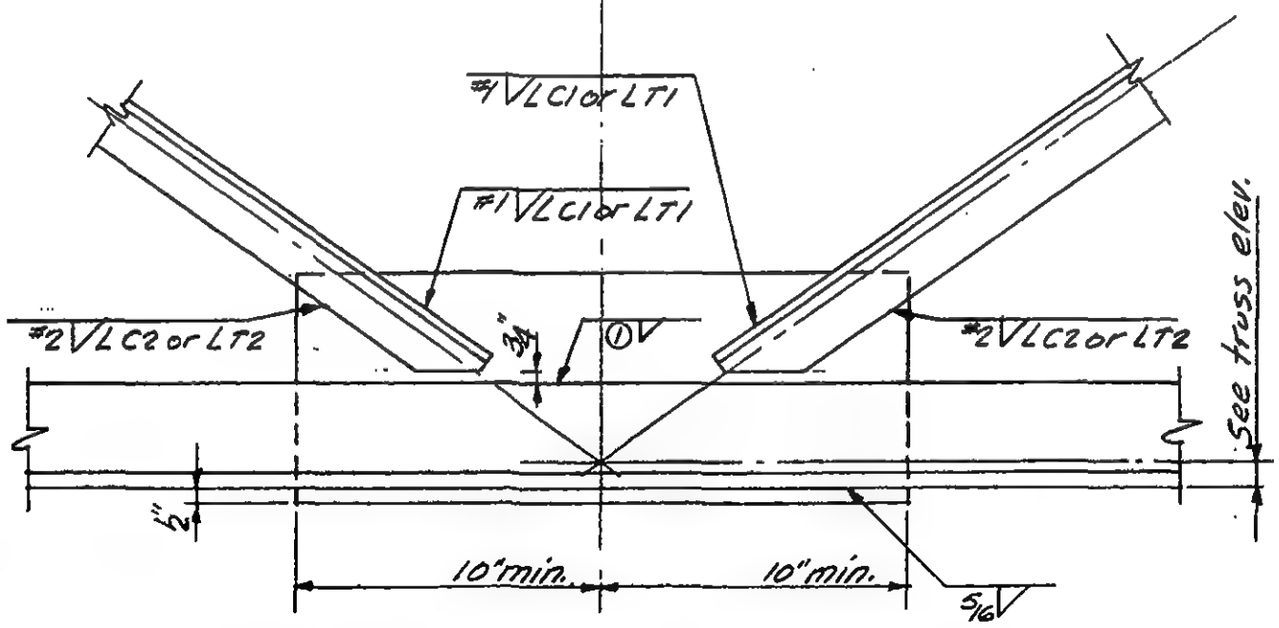

DETAIL 3.3

See table det. 3.1 for welds.
See 7-B7 for truss elevations.

LICENSED PROFESSIONAL ENGINEER
LESLIE E. ROBERTSON
No. 34360
UNIVERSITY OF THE STATE OF NEW YORK

DESIGNED K. Hwang
DRAWN A.L. FRANQUI
REVIEWED W. Brewer

7-B8-3.2

SKILLING, HELLE, CHRISTIANSEN, ROBERTSON — Structural & Civil Engineers

PROJECT: THE WORLD TRADE CENTER | TITLE: FLOOR TRUSS DETAIL 3.4 & 3.5 | DATE: 3-19-69

REVISIONS

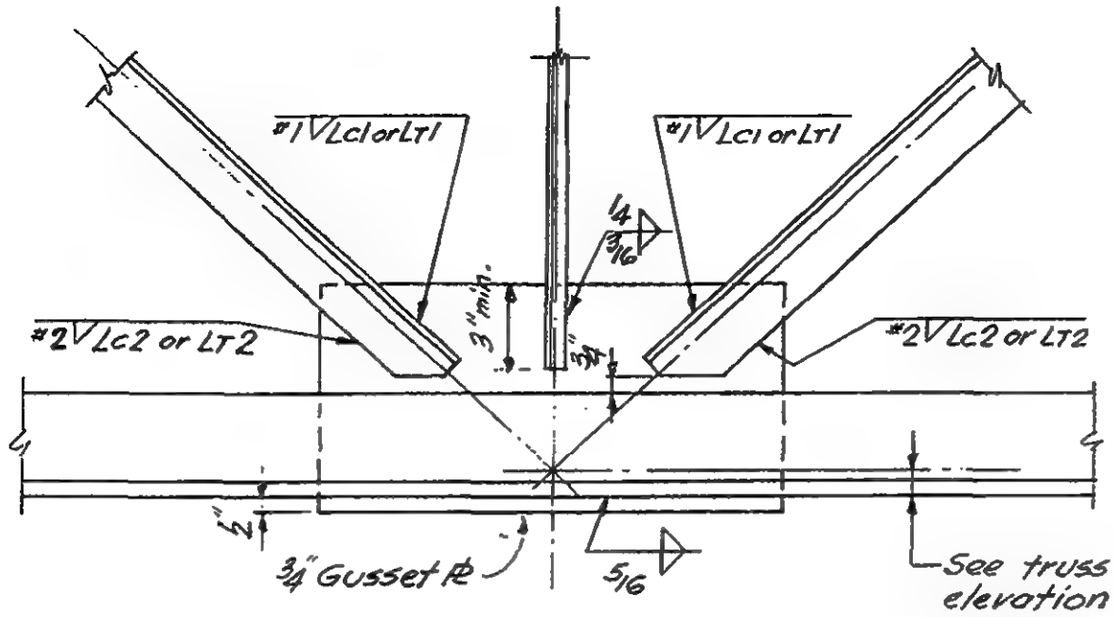

DETAIL 3.4

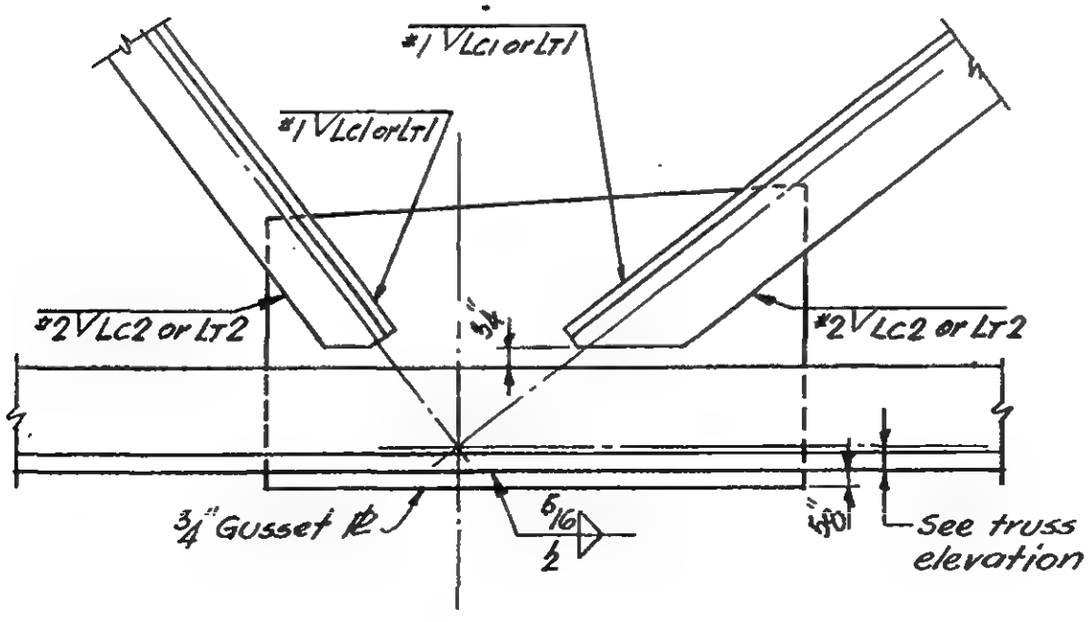

DETAIL 3.5

See 7-B7 for truss elev.
See table detail 3.1 for welds.

LICENSED PROFESSIONAL ENGINEER — LESLIE E. ROBERTSON — No. 34360 — UNIVERSITY OF THE STATE OF NEW YORK

DESIGNED K. Hwang
DRAWN J. Gricius
REVIEWED W. Brewer

7-B8-3.3

SKILLING, HELLE, CHRISTIANSEN, ROBERTSON — Structural & Civil Engineers

PROJECT THE WORLD TRADE CENTER | TITLE FLOOR TRUSS DETAIL 3.6 | DATE 3-19-69

REVISIONS

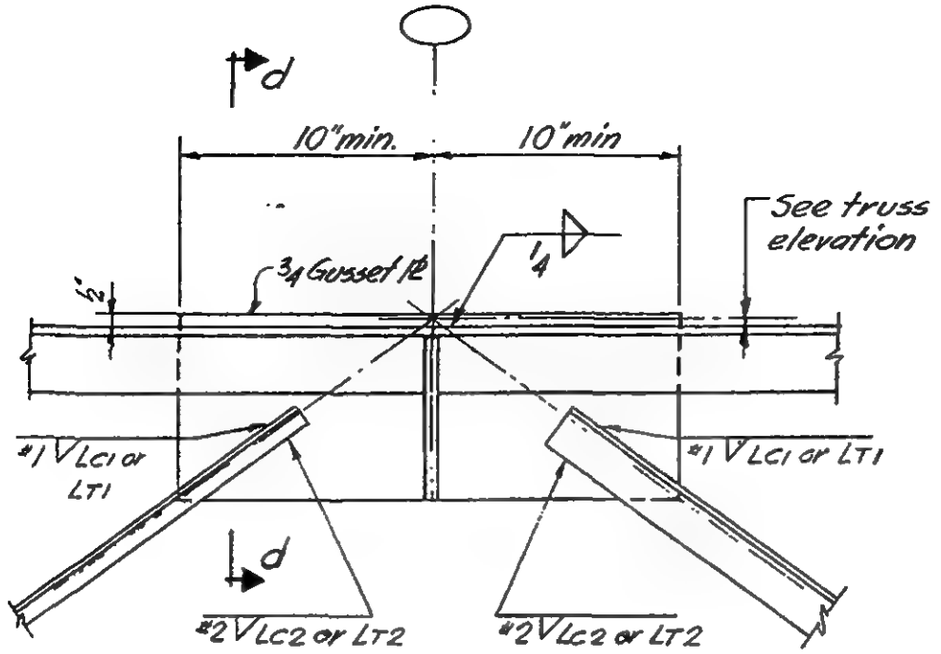

Section c-c

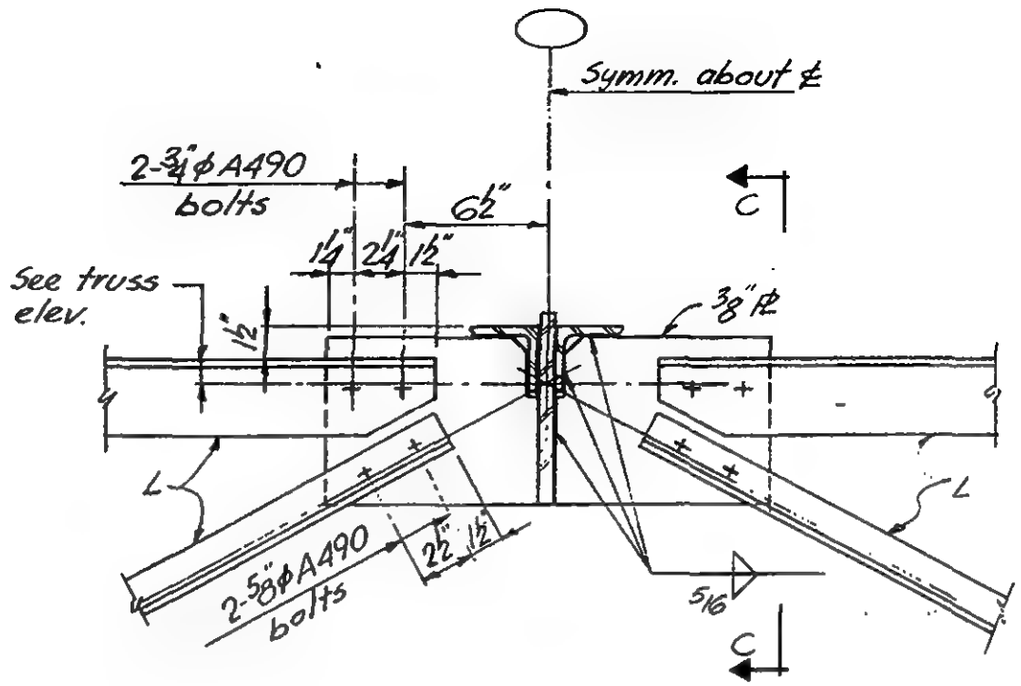

Section d-d

See table det. 3.1 for welds
See 7-B7 for truss elevations

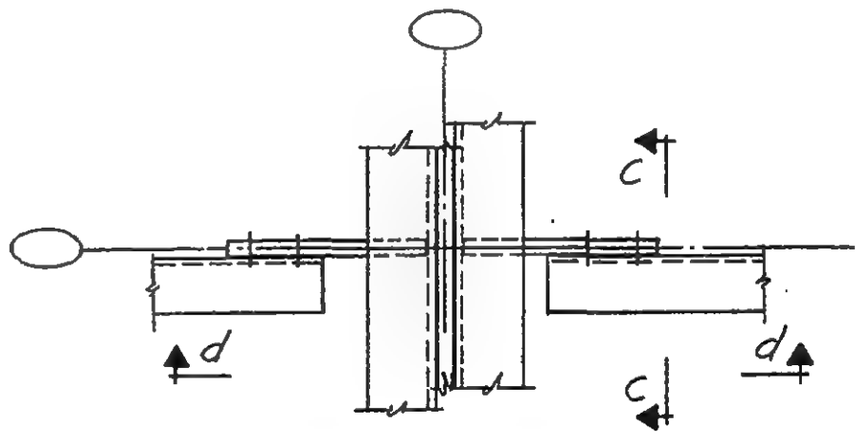

Plan

LICENSED PROFESSIONAL ENGINEER
LESLIE E. ROBERTSON
No. 34960
UNIVERSITY OF THE STATE OF NEW YORK

DESIGNED K. Howang
DRAWN J. Gricius
REVIEWED W. Brewer

7-B8-3.4

SKILLING, HELLE, CHRISTIANSEN, ROBERTSON — Structural & Civil Engineers

PROJECT: THE WORLD TRADE CENTER | TITLE: FLOOR TRUSS DETAIL 3.7 | DATE: 3-19-69

REVISIONS

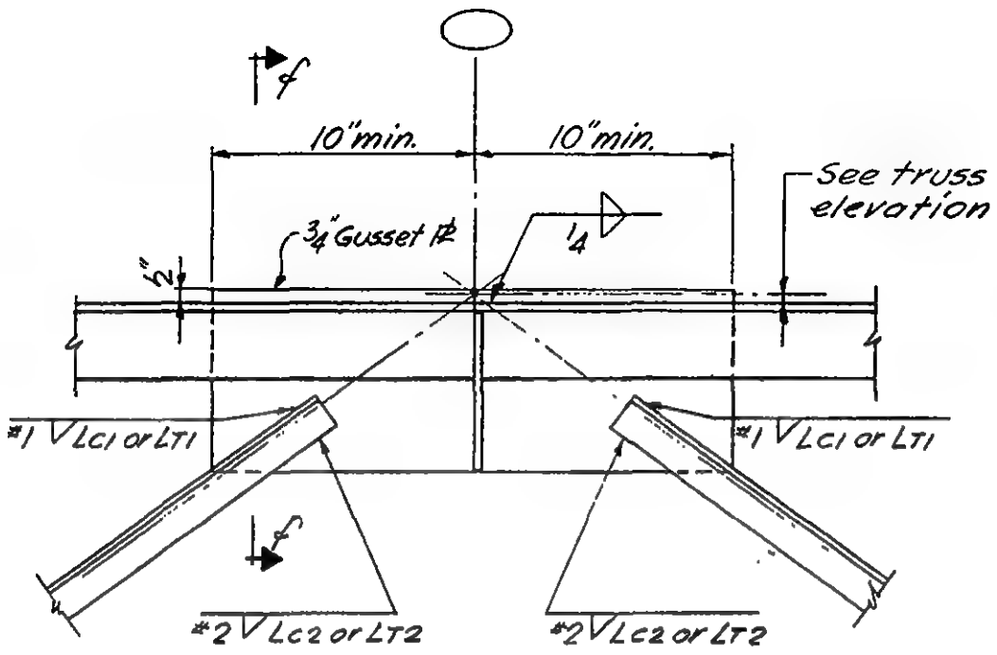

Section e-e

See table det. 3.1 for welds.
See 7-B7 for truss elevations.

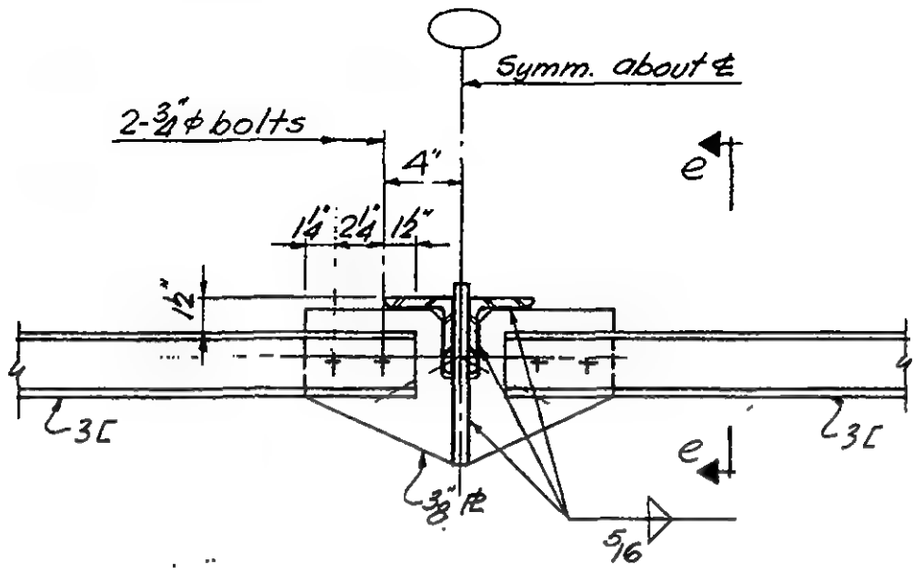

Section f-f

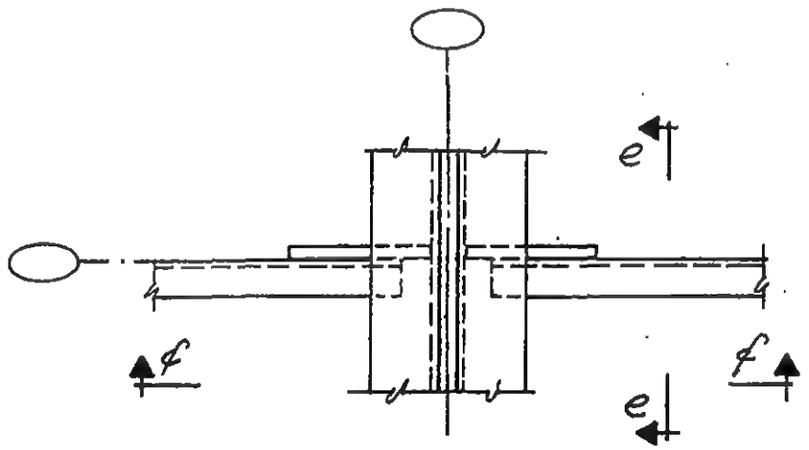

Plan

LICENSED PROFESSIONAL ENGINEER — LESLIE E. ROBERTSON — No. 34360 — UNIVERSITY OF THE STATE OF NEW YORK

DESIGNED K. Hwang
DRAWN J. Gricius
REVIEWED W. Brewer

7-B8-3.5

SKILLING, HELLE, CHRISTIANSEN, ROBERTSON — Structural & Civil Engineers

PROJECT: THE WORLD TRADE CENTER | TITLE: FLOOR TRUSS DETAIL 3.8 | DATE: 3-19-69

REVISIONS

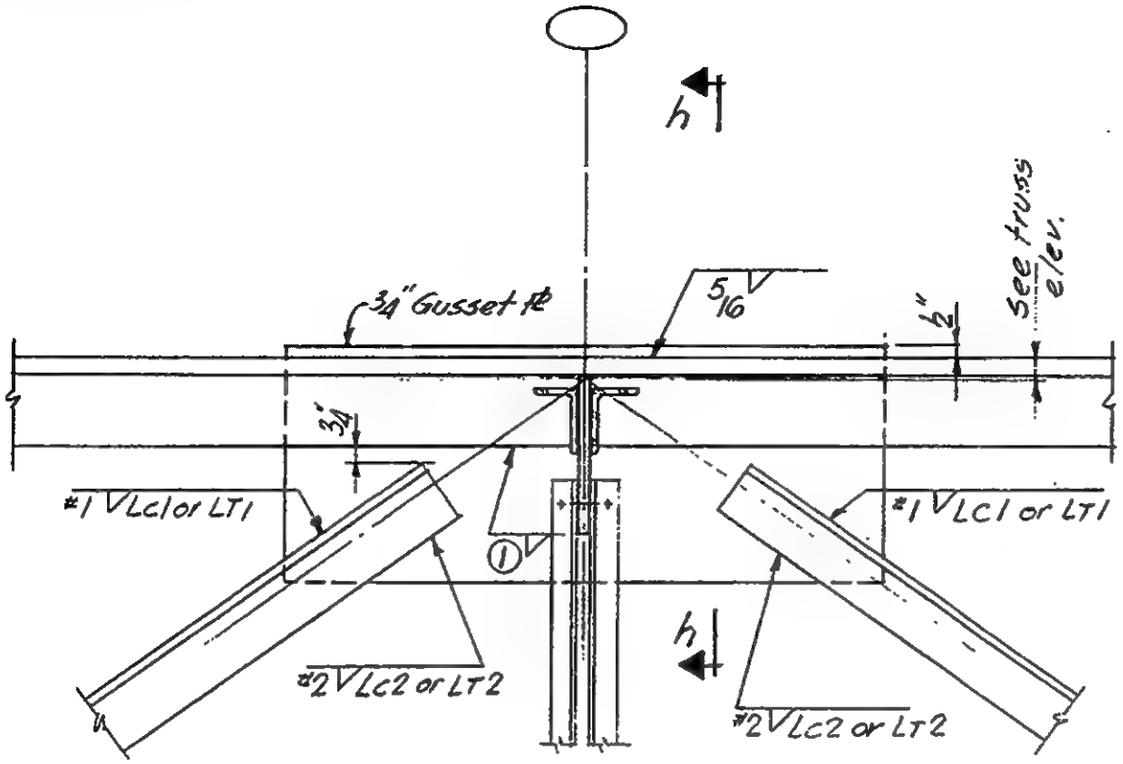

Section g-g

See table det. 3.1 for welds
See 7-B7 for truss elev.

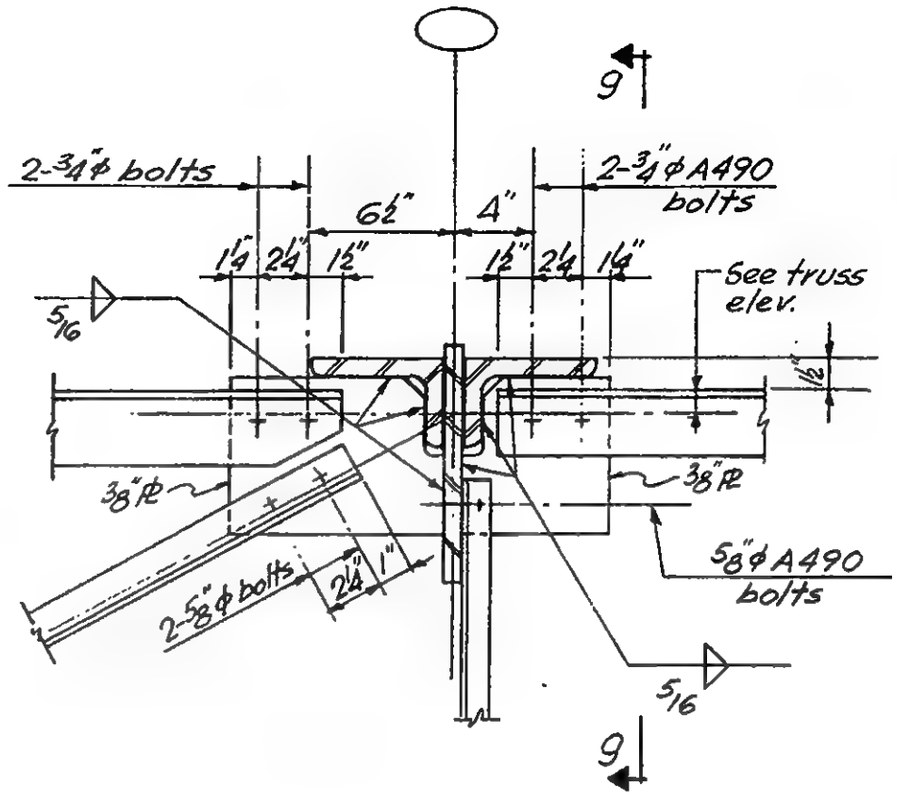

Section h-h

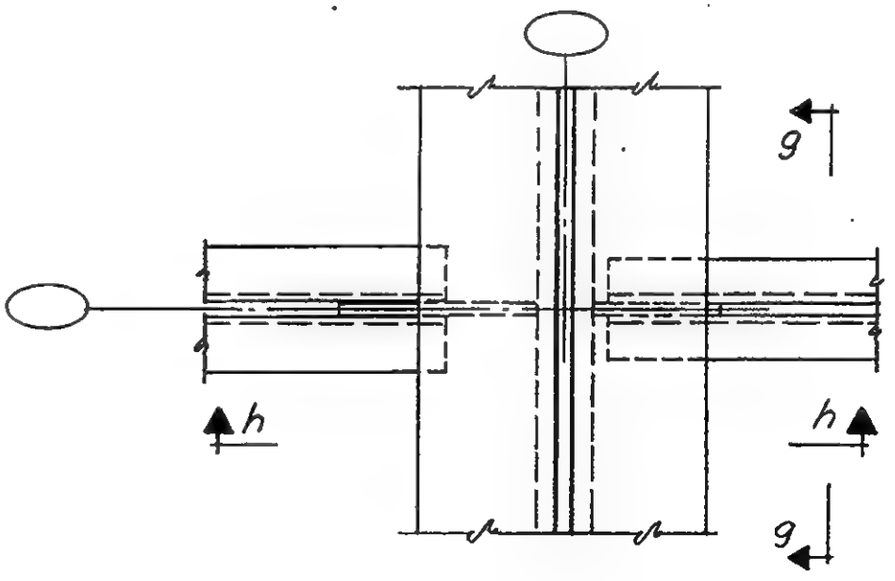

Plan

LICENSED PROFESSIONAL ENGINEER
LESLIE E. ROBERTSON
No. 34360
UNIVERSITY OF THE STATE OF NEW YORK

DESIGNED K. Hwang
DRAWN J. Gricius
REVIEWED W. Brewer

7-B8-3.6

SKILLING, HELLE, CHRISTIANSEN, ROBERTSON — Structural & Civil Engineers

PROJECT: THE WORLD TRADE CENTER | TITLE: FLOOR TRUSS DETAIL 3.9 | DATE: 3-19-69

REVISIONS

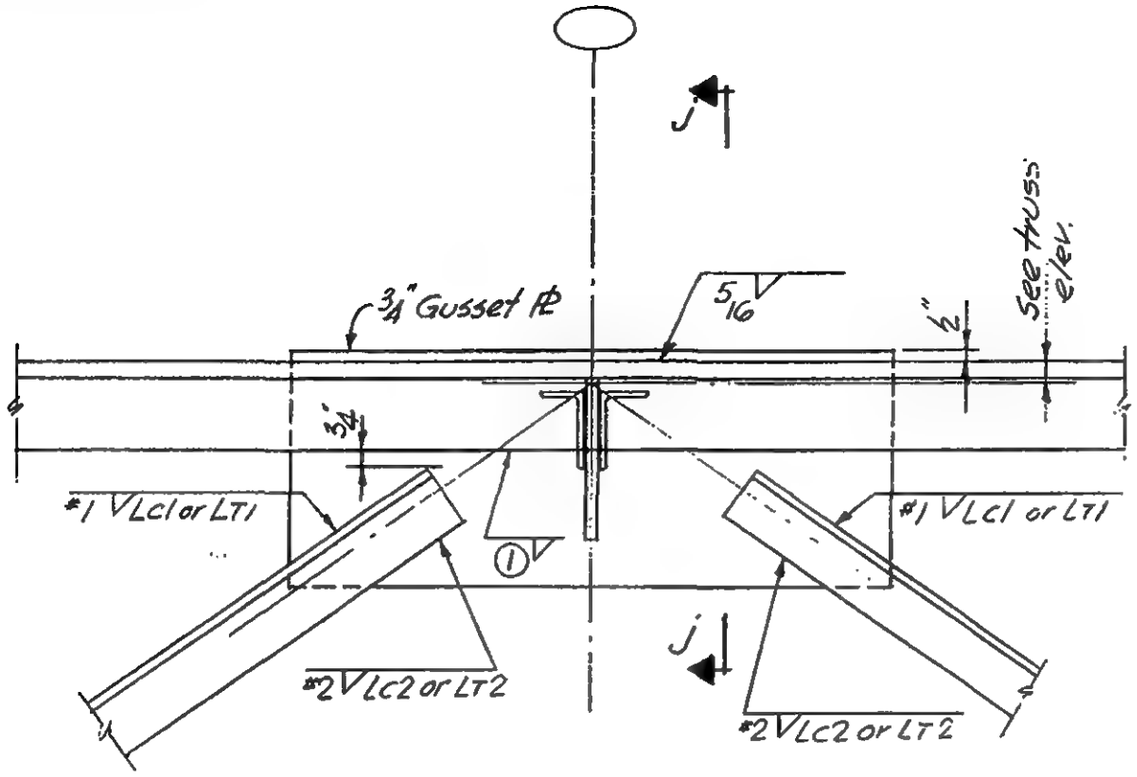

Section i-i

See table det. 3.1 for welds
See 7-B7 for truss elev.

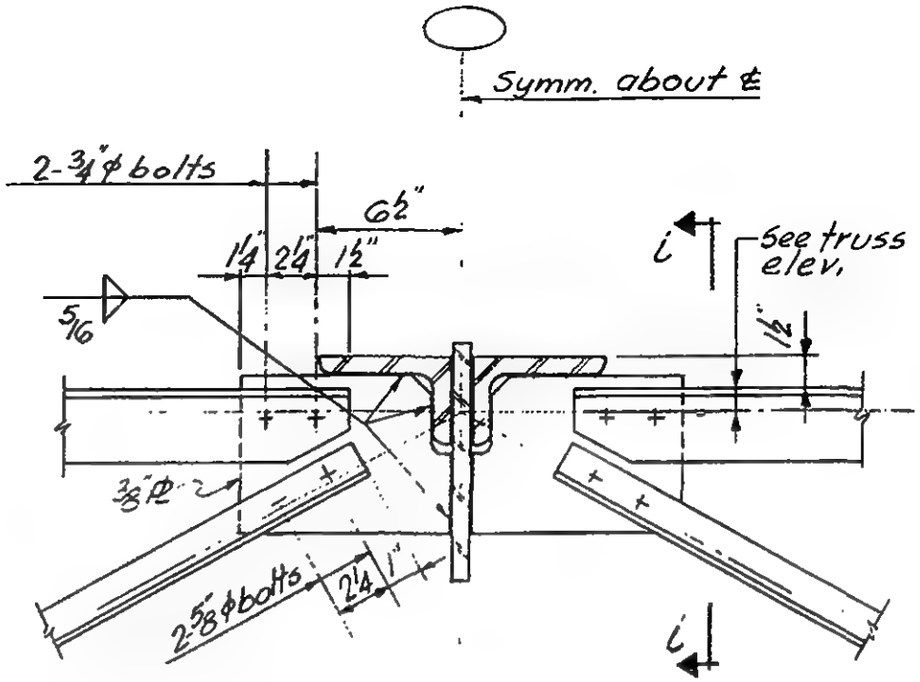

Section j-j

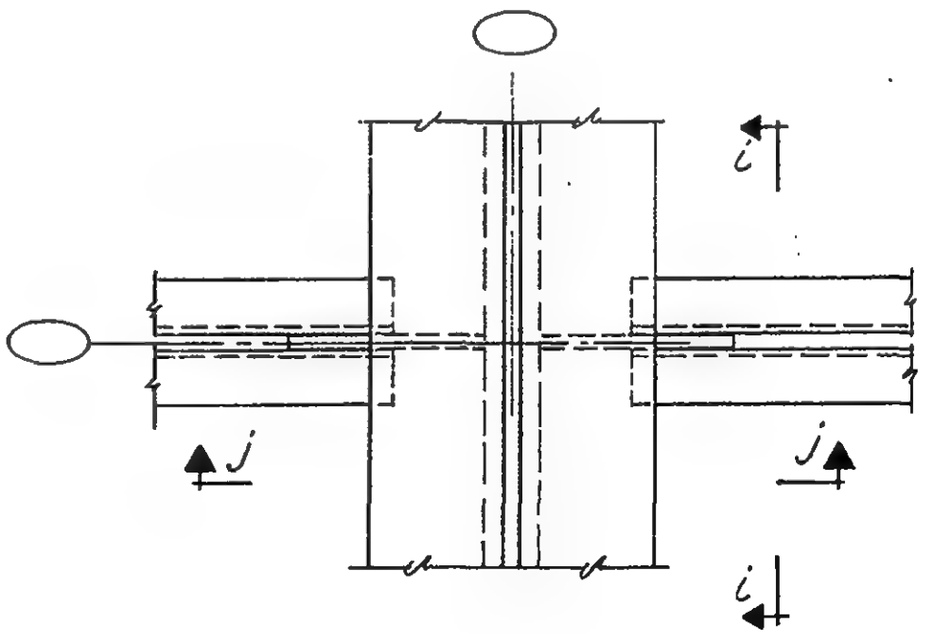

Plan

LICENSED PROFESSIONAL ENGINEER
LESLIE E. ROBERTSON
No. 34360
UNIVERSITY OF THE STATE OF NEW YORK

DESIGNED K. Ibwang
DRAWN J. Gricius
REVIEWED W. Brewer

7-B8-3.7

SKILLING, HELLE, CHRISTIANSEN, ROBERTSON — Structural & Civil Engineers

PROJECT: THE WORLD TRADE CENTER | TITLE: FLOOR TRUSS DETAILS 3.10 & 3.11 | DATE: 3-19-69

REVISIONS

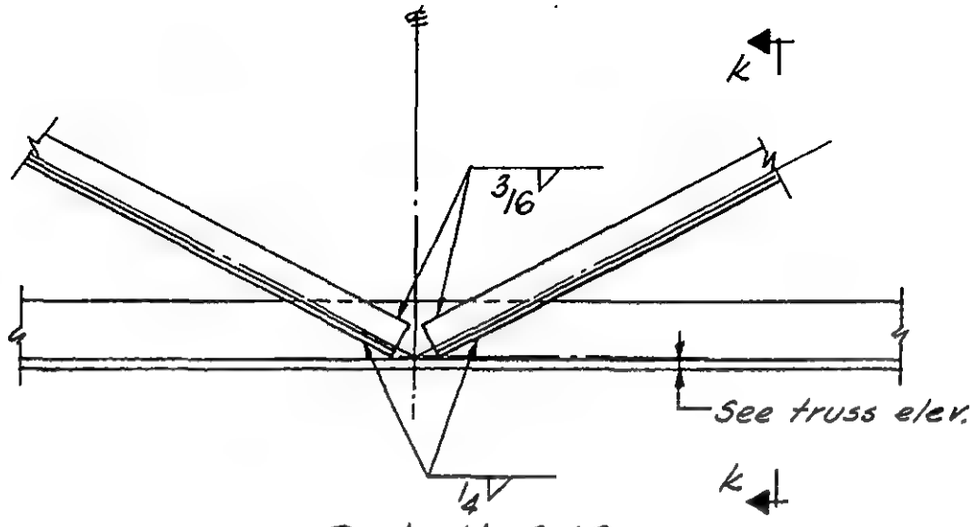

Detail 3.10

Section k-k

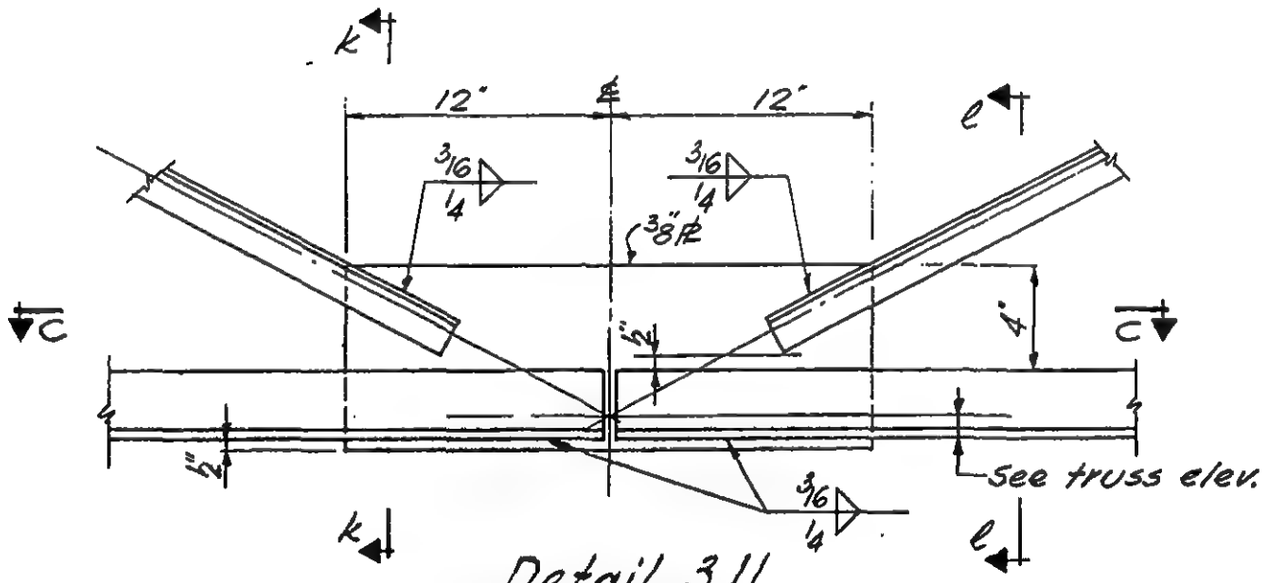

Detail 3.11

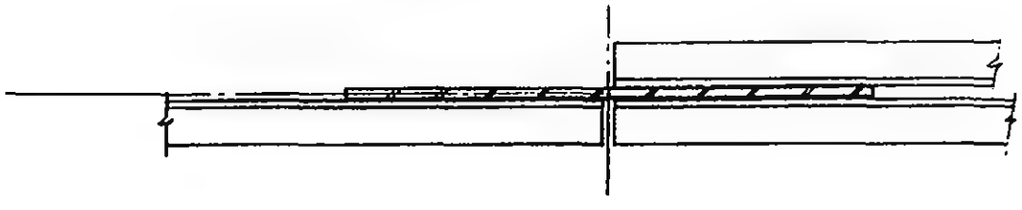

Plan

℄ Symm. about ℄

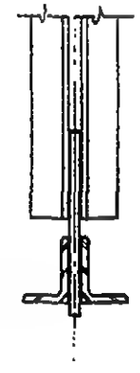

Section ℓ-ℓ

See 7-B7 for truss elev.

LICENSED PROFESSIONAL ENGINEER — LESLIE E. ROBERTSON — No. 34360 — UNIVERSITY OF THE STATE OF NEW YORK

DESIGNED K. Hwang

DRAWN J. Gricius

REVIEWED W. Brewer

7-B8-3.8

SKILLING, HELLE, CHRISTIANSEN, ROBERTSON — Structural & Civil Engineers

PROJECT: THE WORLD TRADE CENTER

TITLE: FLOOR TRUSS DETAIL 3.12

DATE: 3-19-69

REVISIONS

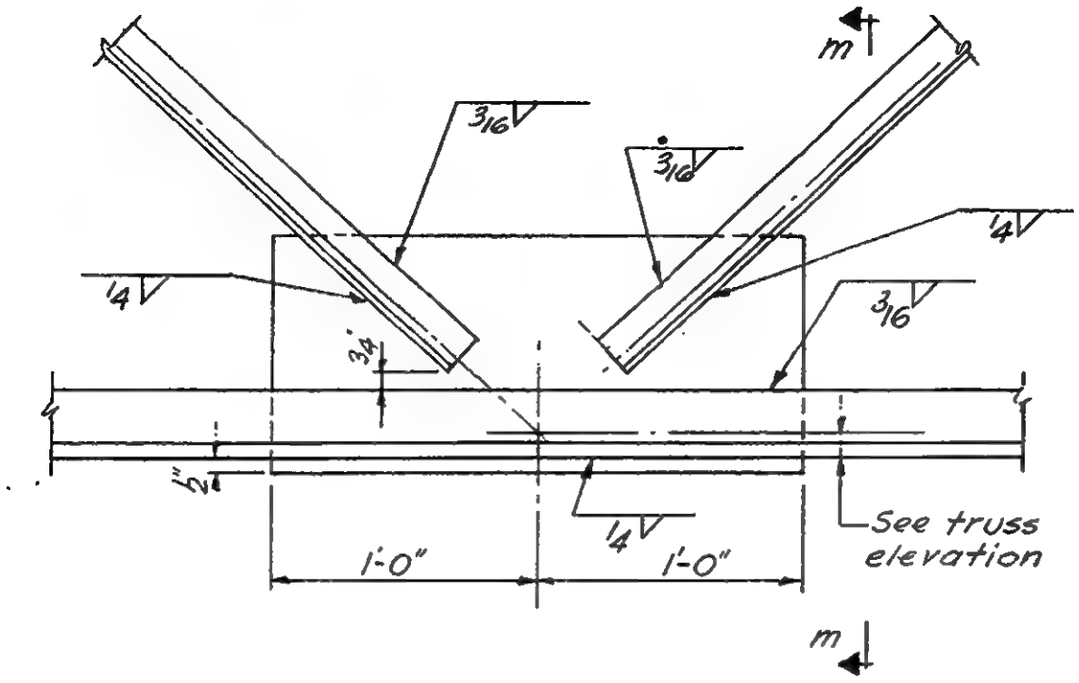

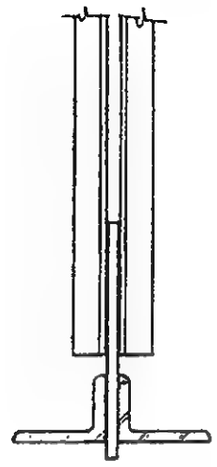

Section m-m

See 7-B7 for truss elev.

LICENSED PROFESSIONAL ENGINEER — LESLIE E. ROBERTSON — No. 34360 — UNIVERSITY OF THE STATE OF NEW YORK

DESIGNED K. Hwang

DRAWN J. Gricius

REVIEWED W. Brewer

7-B8-3.9

SKILLING, HELLE, CHRISTIANSEN, ROBERTSON — Structural & Civil Engineers

PROJECT: THE WORLD TRADE CENTER | TITLE: FLOOR TRUSS DETAIL 3.13 | DATE: 3-19-69

REVISIONS

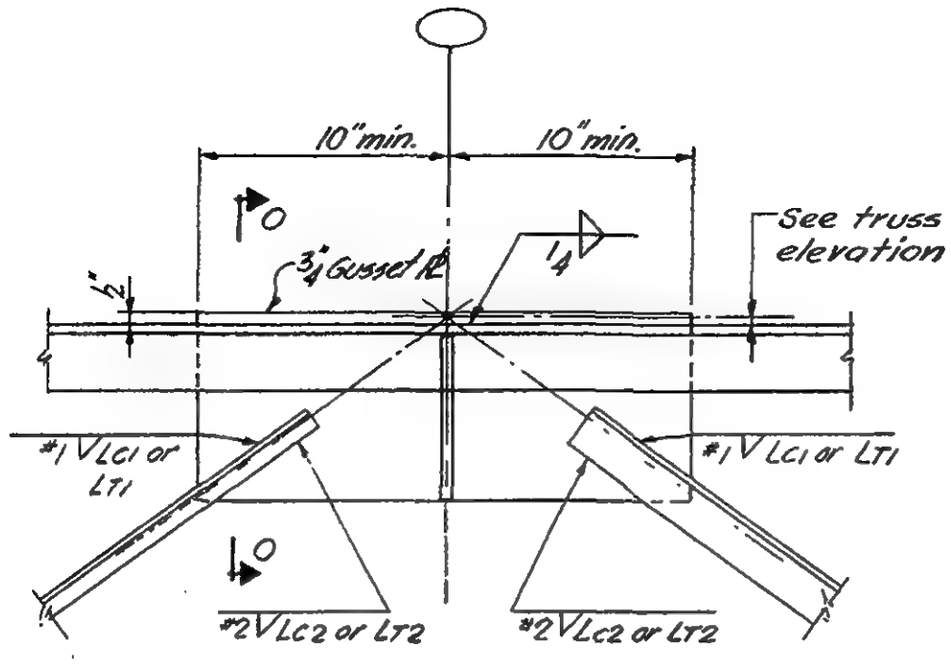

Section n-n

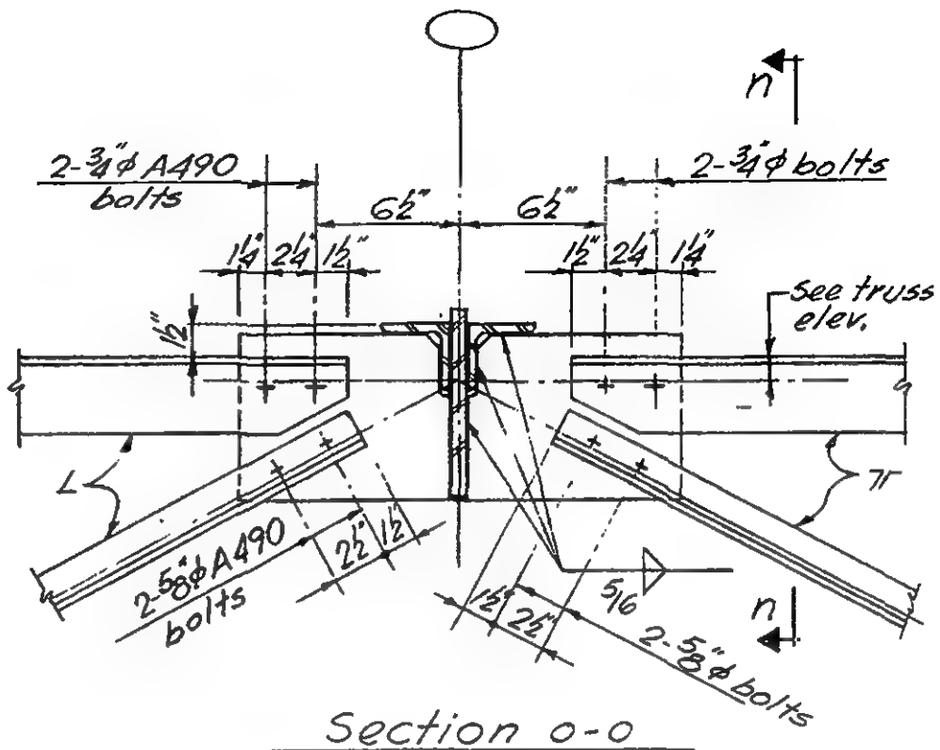

Section o-o

See table det. 3.1 for welds
see 7-B7 for truss elevations

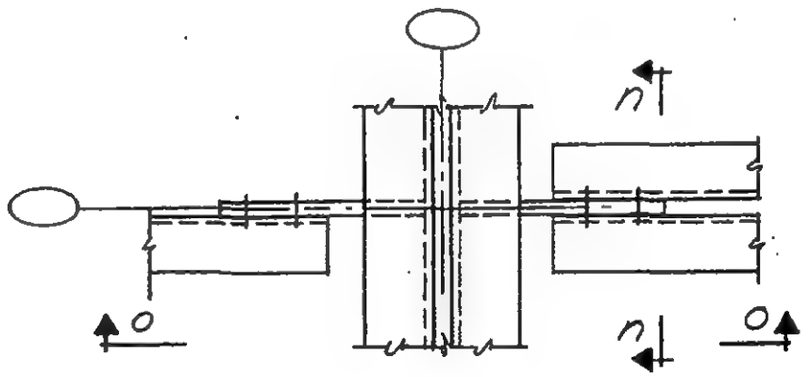

Plan

LICENSED PROFESSIONAL ENGINEER
LESLIE E. ROBERTSON
No. 34360
UNIVERSITY OF THE STATE OF NEW YORK

DESIGNED K. Hwang
DRAWN J. Gricius
REVIEWED W. Brower

7-BB-3.10

SKILLING, HELLE, CHRISTIANSEN, ROBERTSON — Structural & Civil Engineers

PROJECT: THE WORLD TRADE CENTER | TITLE: FLOOR TRUSS DETAIL 3.14 | DATE: 3-19-69

REVISIONS

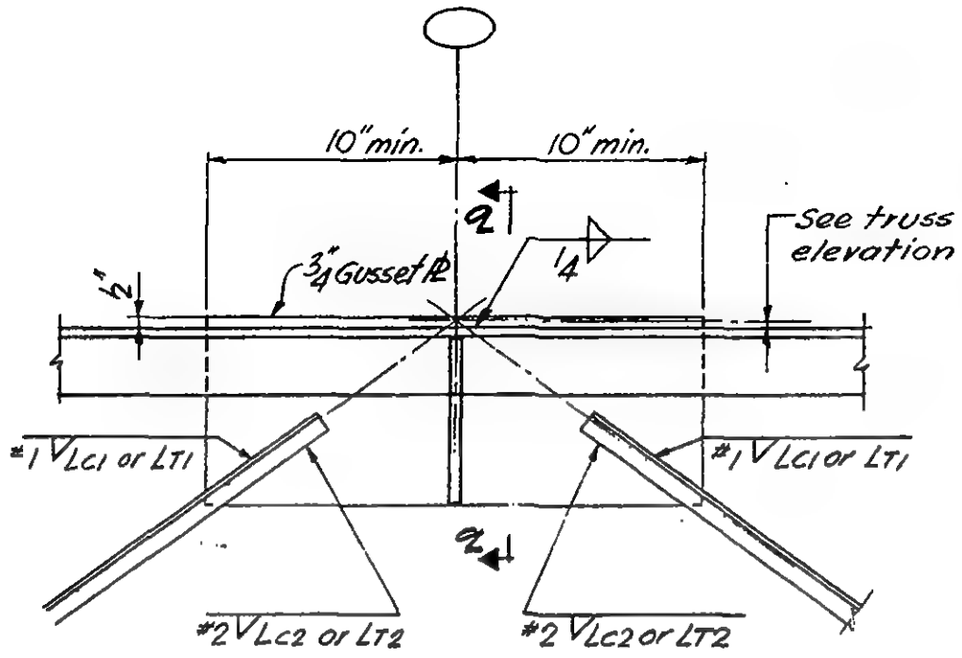

Section p-p

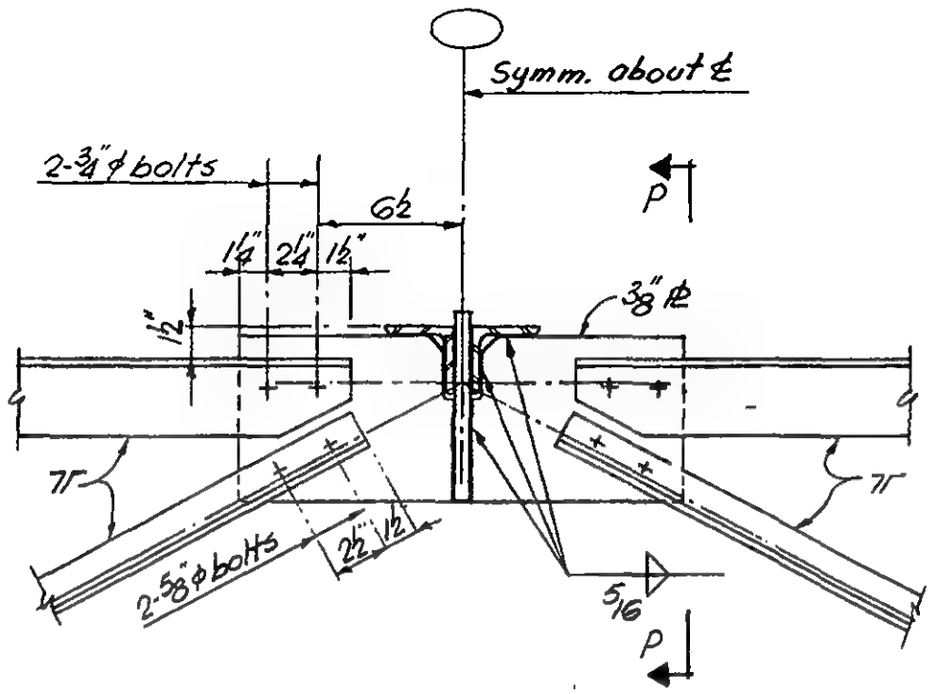

Section q-q

See table det. 3.1 for welds
see 7-B7 for truss elevations

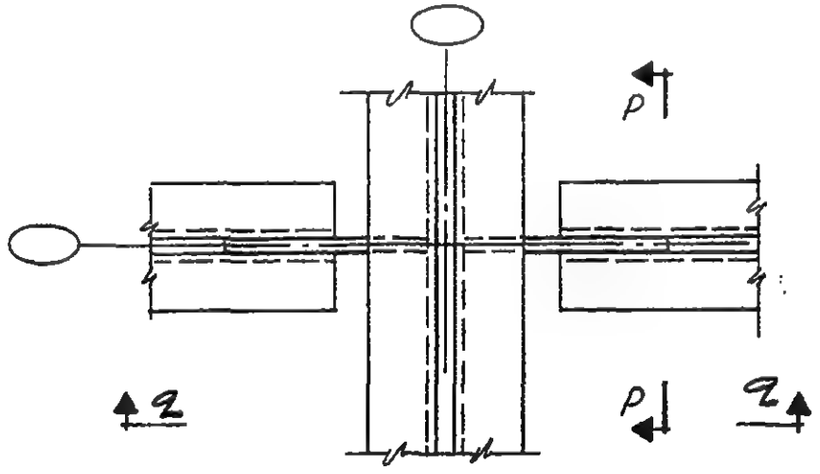

Plan

LICENSED PROFESSIONAL ENGINEER
LESLIE E. ROBERTSON
No. 34960
UNIVERSITY OF THE STATE OF NEW YORK

DESIGNED K. Hwang
DRAWN J. Gricius
REVIEWED W. Brewer

7-B8-3.11

SKILLING, HELLE, CHRISTIANSEN, ROBERTSON — Structural & Civil Engineers

PROJECT: THE WORLD TRADE CENTER | TITLE: FLOOR TRUSS DETAIL 3.15 | DATE: 3-19-69

REVISIONS

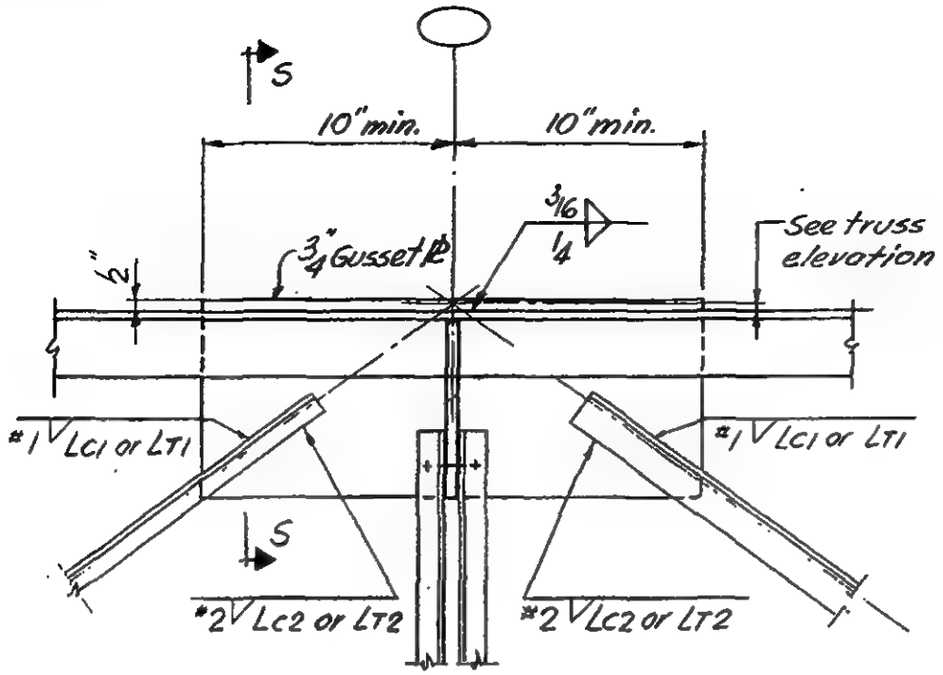

Section r-r

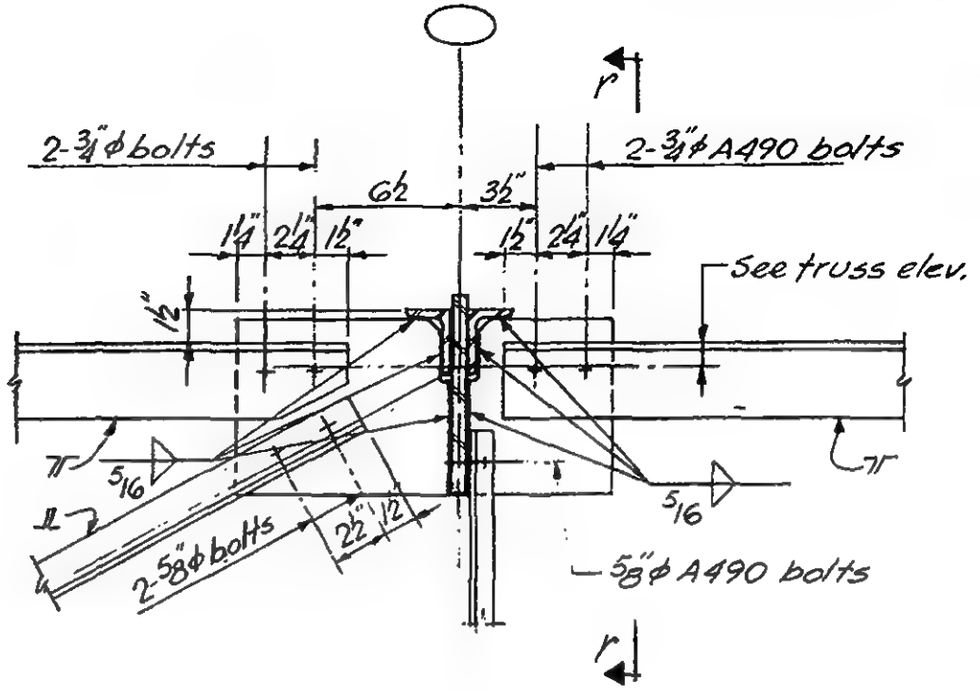

Section 5-5

See table det. 3.1 for welds
See 7-B7 for truss elevations

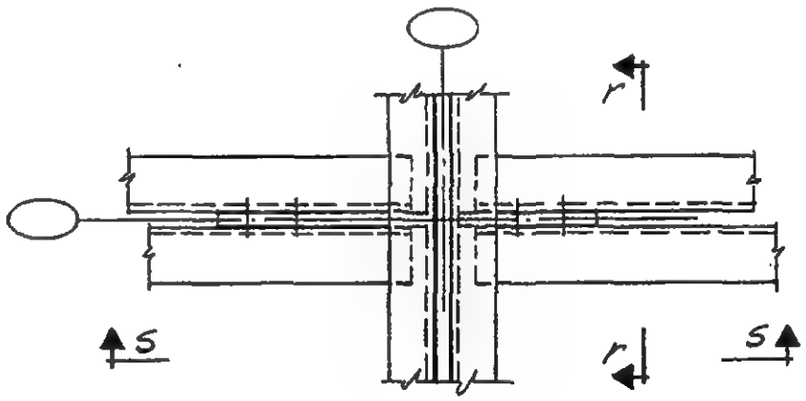

Plan

LICENSED PROFESSIONAL ENGINEER · LESLIE E. ROBERTSON · No. 34360 · UNIVERSITY OF THE STATE OF NEW YORK

DESIGNED K. Howang
DRAWN J. Gricius
REVIEWED W. Brewer

7-B8-3.12

SKILLING, HELLE, CHRISTIANSEN, ROBERTSON — Structural & Civil Engineers

PROJECT: THE WORLD TRADE CENTER | TITLE: FLOOR TRUSS DETAIL 3.16 | DATE: 3-19-69

REVISIONS

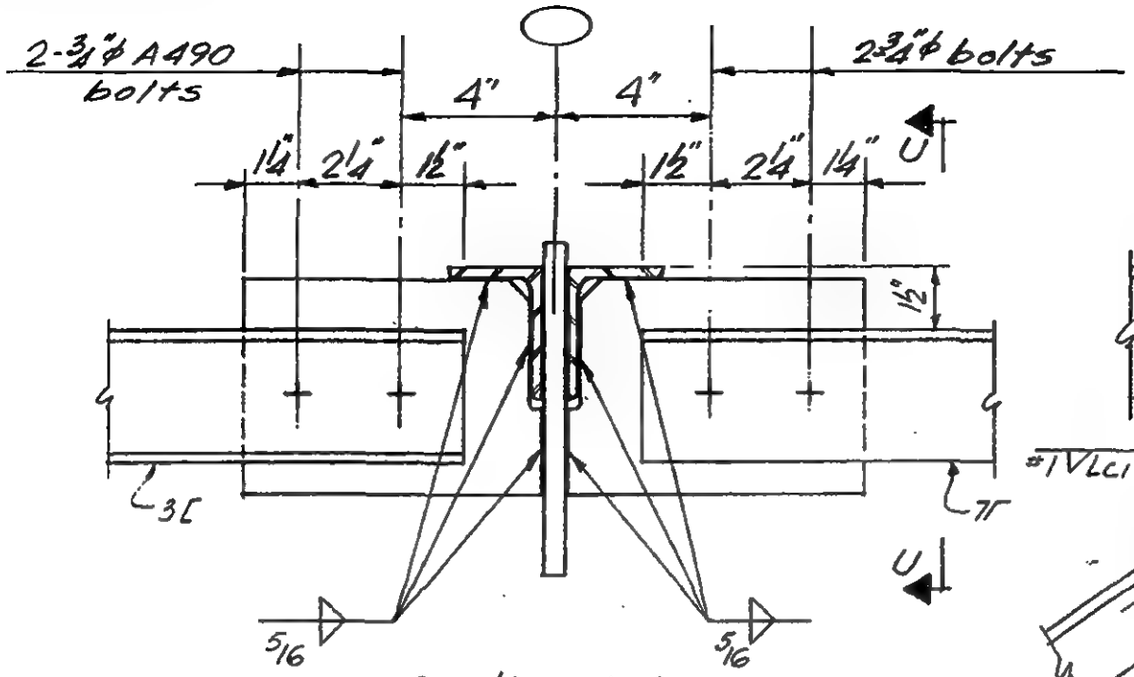

Section t-t

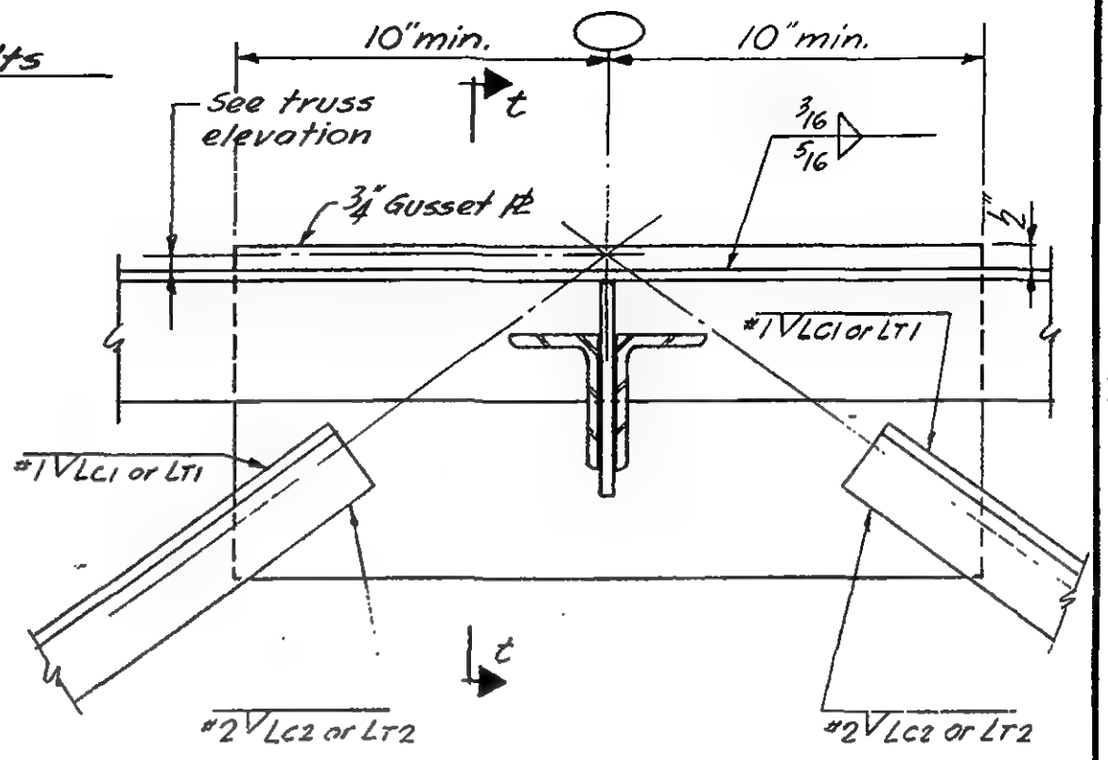

Section U-U

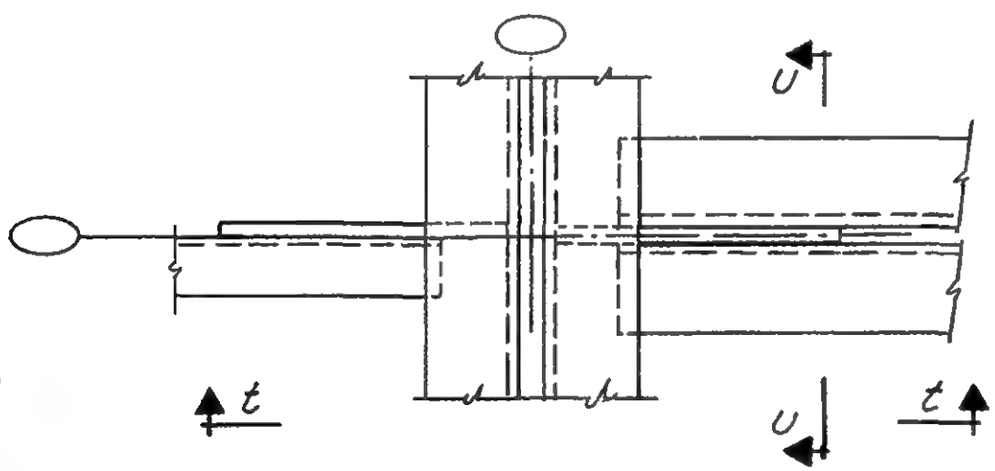

Plan

See table det 3.1 for welds.
See 7-B7 for truss elevations.

LICENSED PROFESSIONAL ENGINEER — LESLIE E. ROBERTSON — No. 34360 — UNIVERSITY OF THE STATE OF NEW YORK

DESIGNED K. Hwang
DRAWN J. Gricius
REVIEWED W. Brewer

7-B8-3.13

SKILLING, HELLE, CHRISTIANSEN, ROBERTSON — Structural & Civil Engineers

PROJECT: THE WORLD TRADE CENTER | TITLE: FLOOR TRUSS DETAIL 3.17 | DATE: 3-19-69

REVISIONS

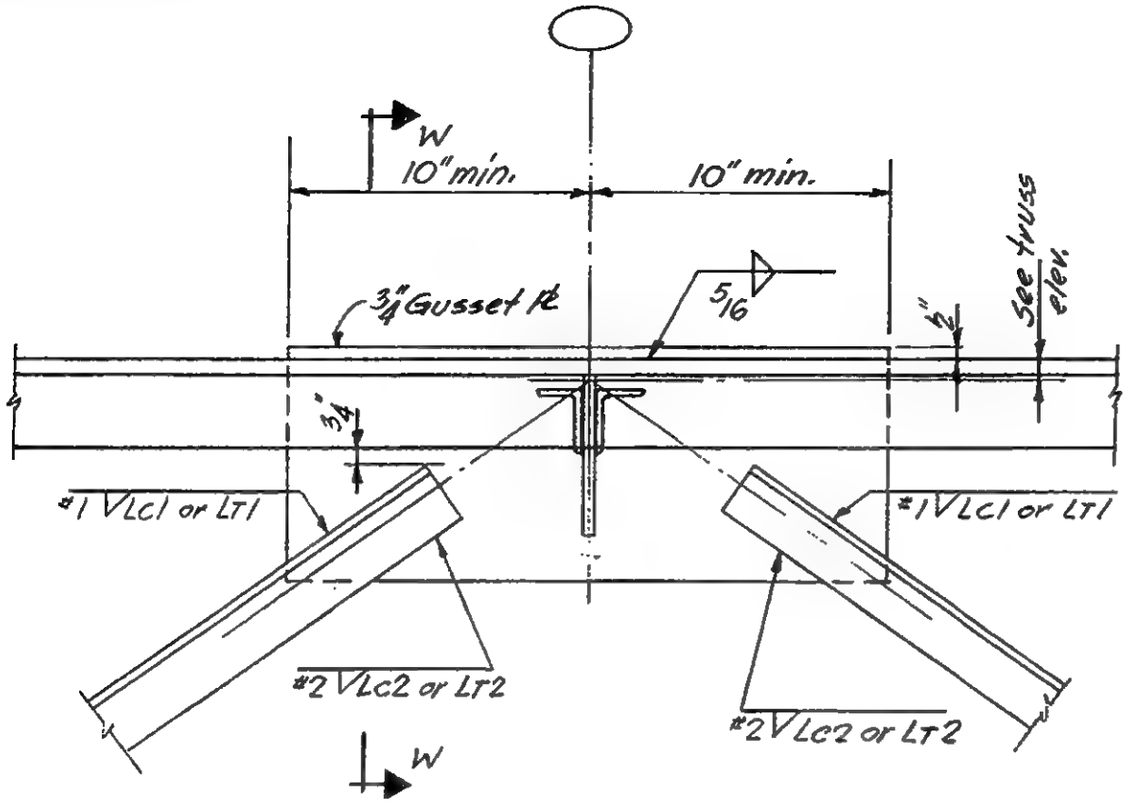

Section V-V

See table det. 3.1 for welds.
See 7-B7 for truss elev.

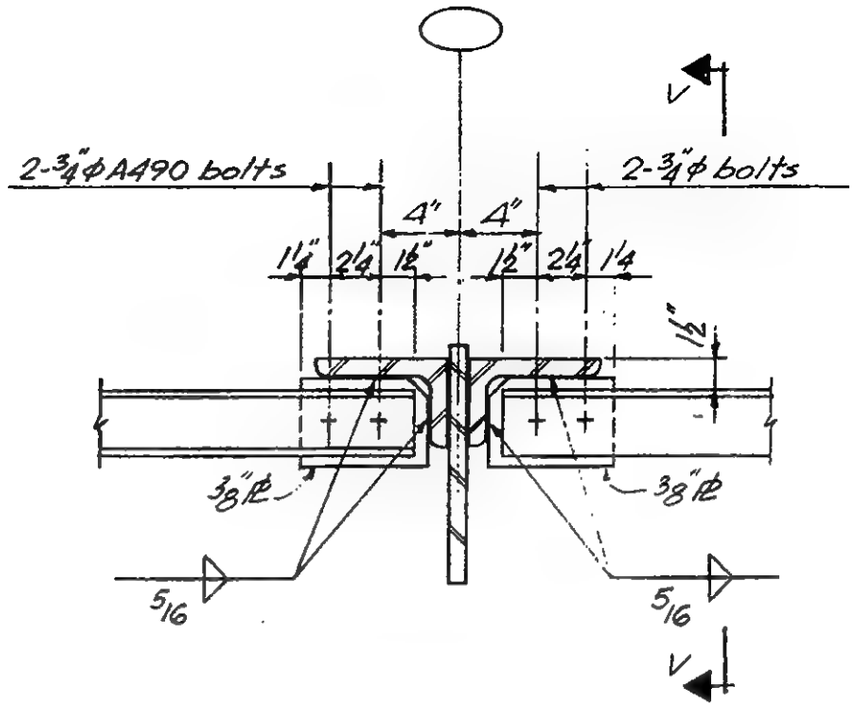

Section W-W

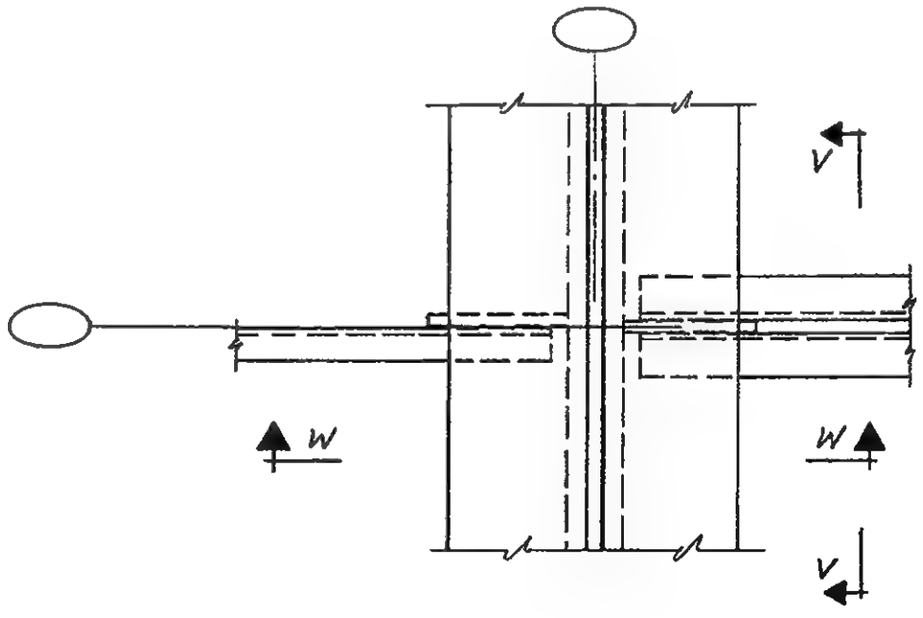

Plan

LICENSED PROFESSIONAL ENGINEER
LESLIE E. ROBERTSON
No. 34360
UNIVERSITY OF THE STATE OF NEW YORK

DESIGNED K. Ghavang
DRAWN J. Gricius
REVIEWED W. Brewer

7-B8-3.14

SKILLING, HELLE, CHRISTIANSEN, ROBERTSON — Structural & Civil Engineers

PROJECT: THE WORLD TRADE CENTER | TITLE: FLOOR TRUSS DETAIL 3.18 & 3.19 | DATE: 3-19-69

REVISIONS

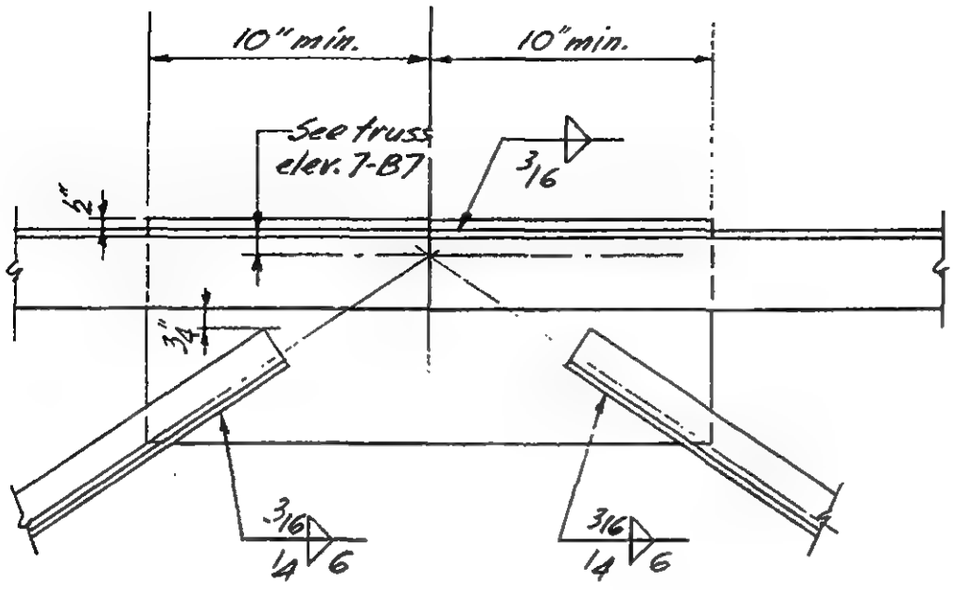

DETAIL 3.18

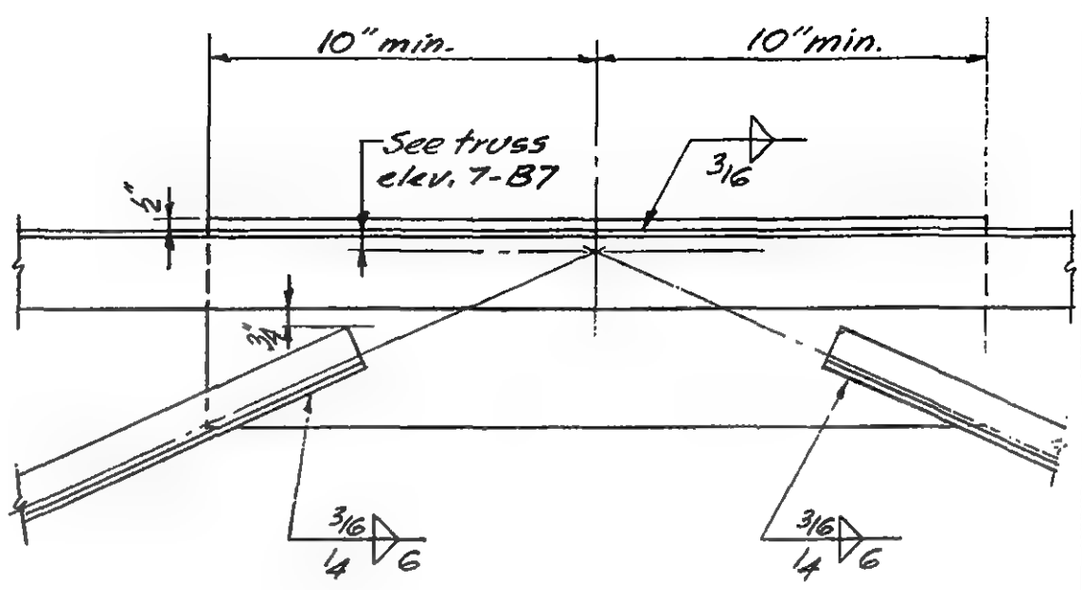

DETAIL 3.19

LICENSED PROFESSIONAL ENGINEER
LESLIE E. ROBERTSON
No. 34360
UNIVERSITY OF THE STATE OF NEW YORK

DESIGNED K. Hwang
DRAWN J. Gricius
REVIEWED W. Brewer

7-B8-3.15

SKILLING, HELLE, CHRISTIANSEN, ROBERTSON — Structural & Civil Engineers

PROJECT	TITLE	DATE
THE WORLD TRADE CENTER	FLOOR TRUSS DETAIL 3.20	3-19-69

REVISIONS

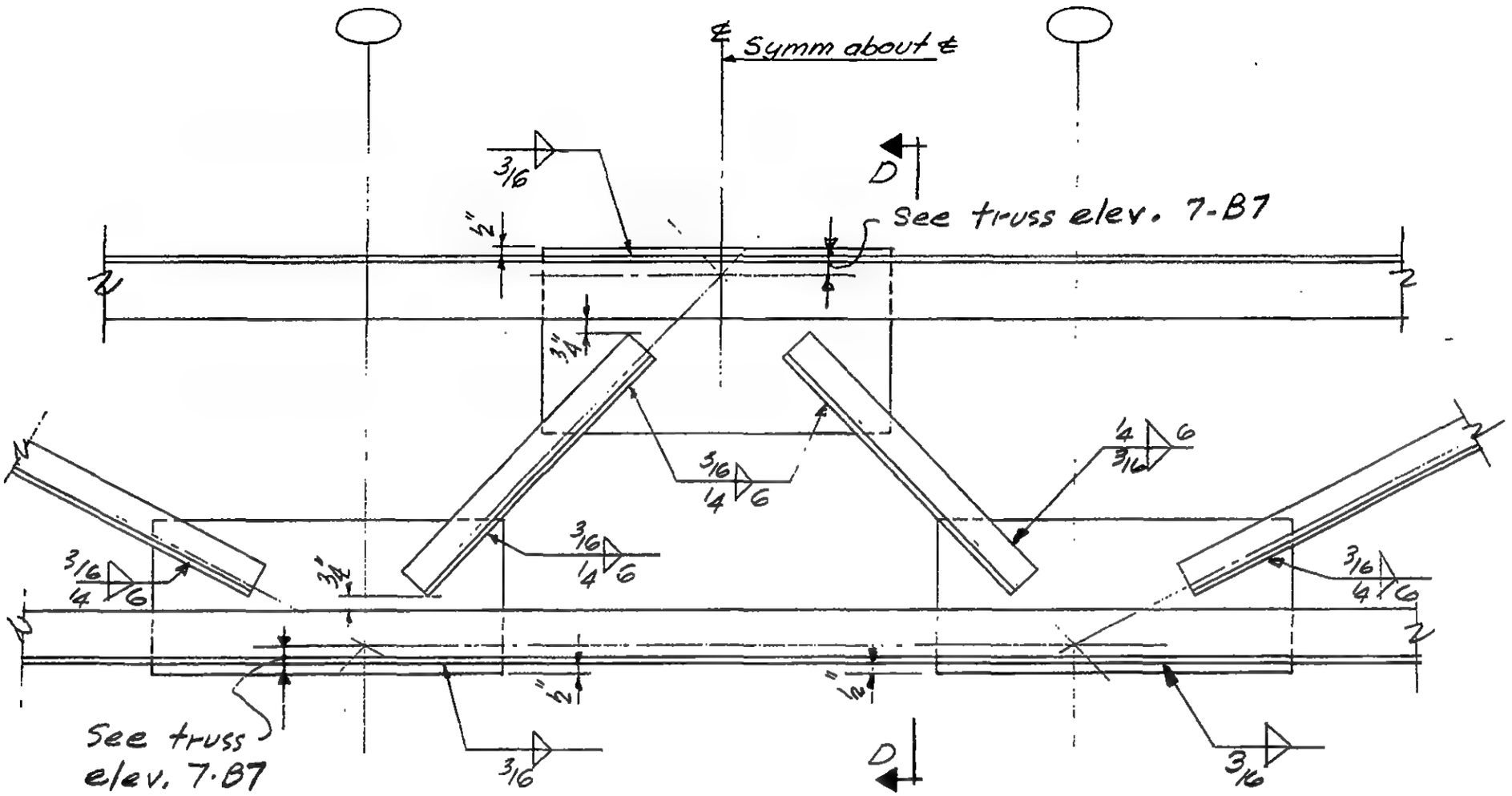

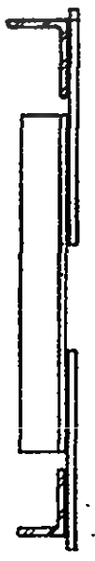

Section D-D

LICENSED PROFESSIONAL ENGINEER
LESLIE E. ROBERTSON
No. 34360
UNIVERSITY OF THE STATE OF NEW YORK

DESIGNED K. Hwang
DRAWN J. Gricius
REVIEWED W. Brewer

7-B8-3.16

SKILLING, HELLE, CHRISTIANSEN, ROBERTSON — Structural & Civil Engineers

PROJECT THE WORLD TRADE CENTER | TITLE FLOOR TRUSS DETAILS 4.1, 4.2, 4.3 | DATE 3-19-69

REVISIONS

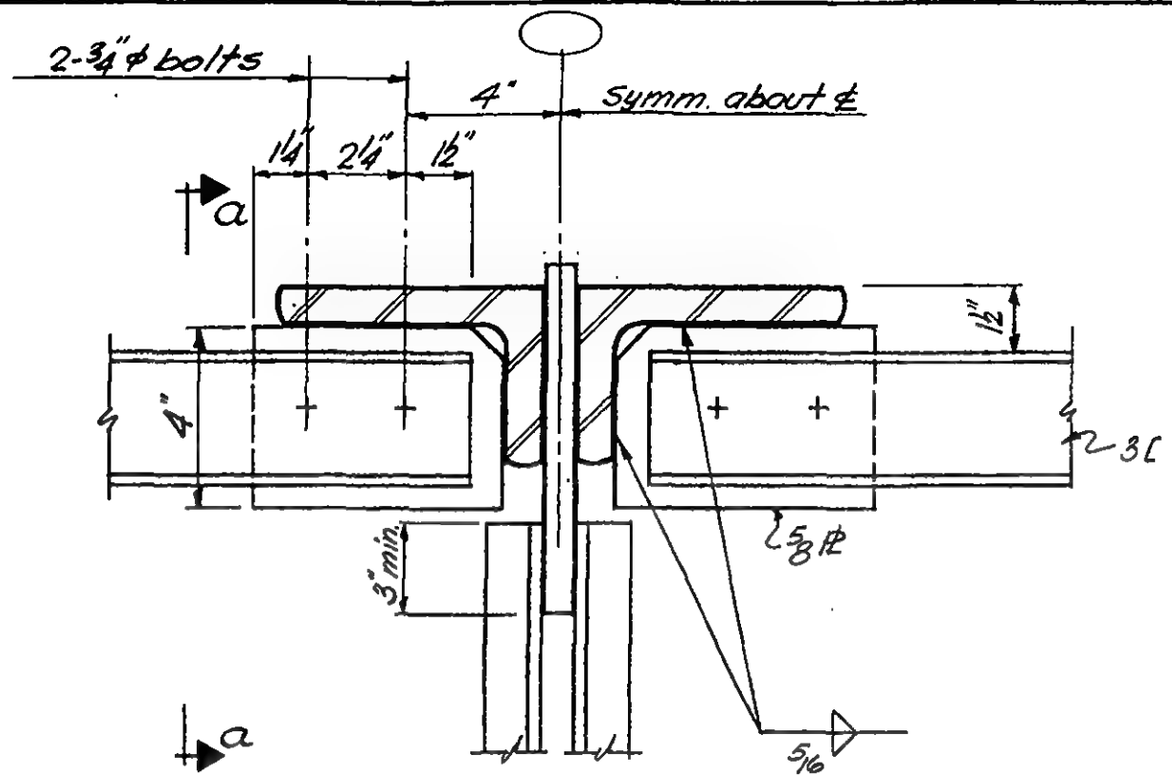

Detail 4.1

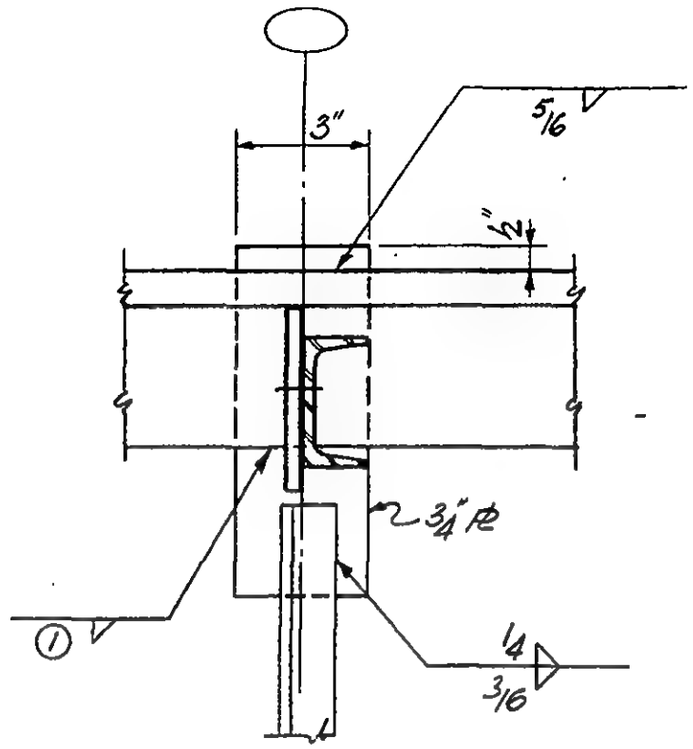

Section a-a

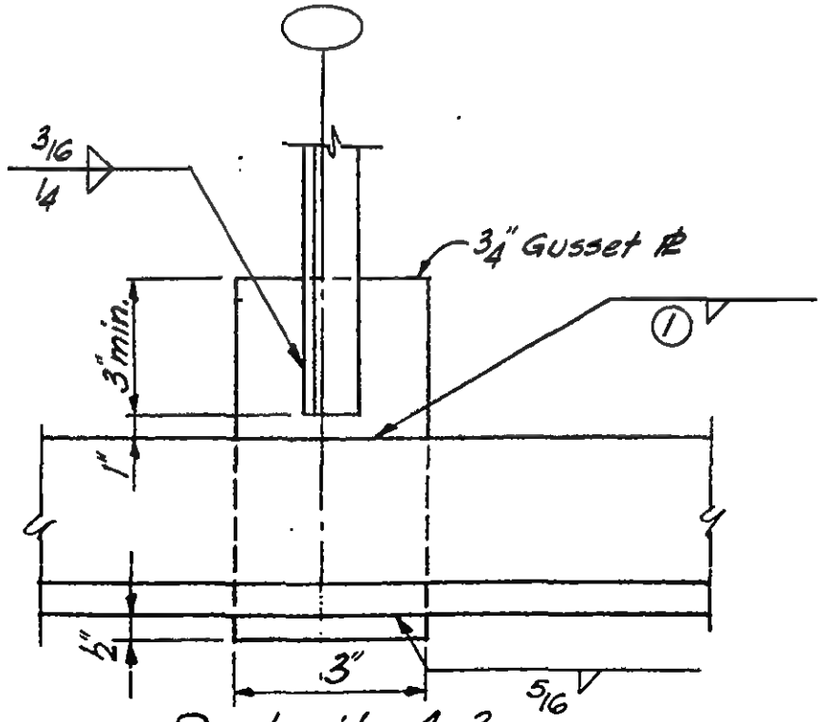

Detail 4.3

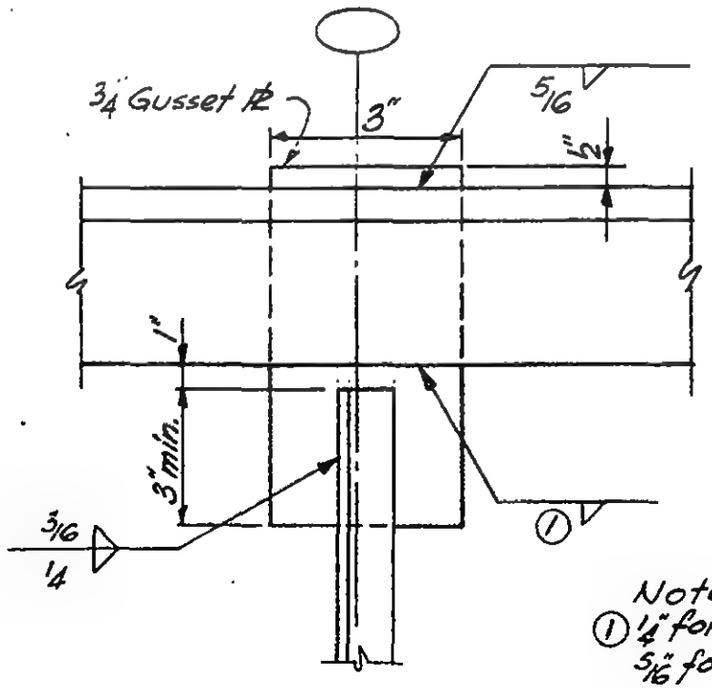

Detail 4.2

Note:
① 1/4" for 7T ≤ to 3/4" thick.
5/16" for 7T > than 3/4" thick.
See 7-B7 for truss elev.

LICENSED PROFESSIONAL ENGINEER — LESLIE E. ROBERTSON — No. 34360 — UNIVERSITY OF THE STATE OF NEW YORK

DESIGNED K. Hwang
DRAWN J. Gricius
REVIEWED W. Brewer

7-B8-4.1

SKILLING, HELLE, CHRISTIANSEN, ROBERTSON — Structural & Civil Engineers

PROJECT THE WORLD TRADE CENTER | TITLE FLOOR TRUSS DETAILS 4.4 | DATE 3-19-69

REVISIONS

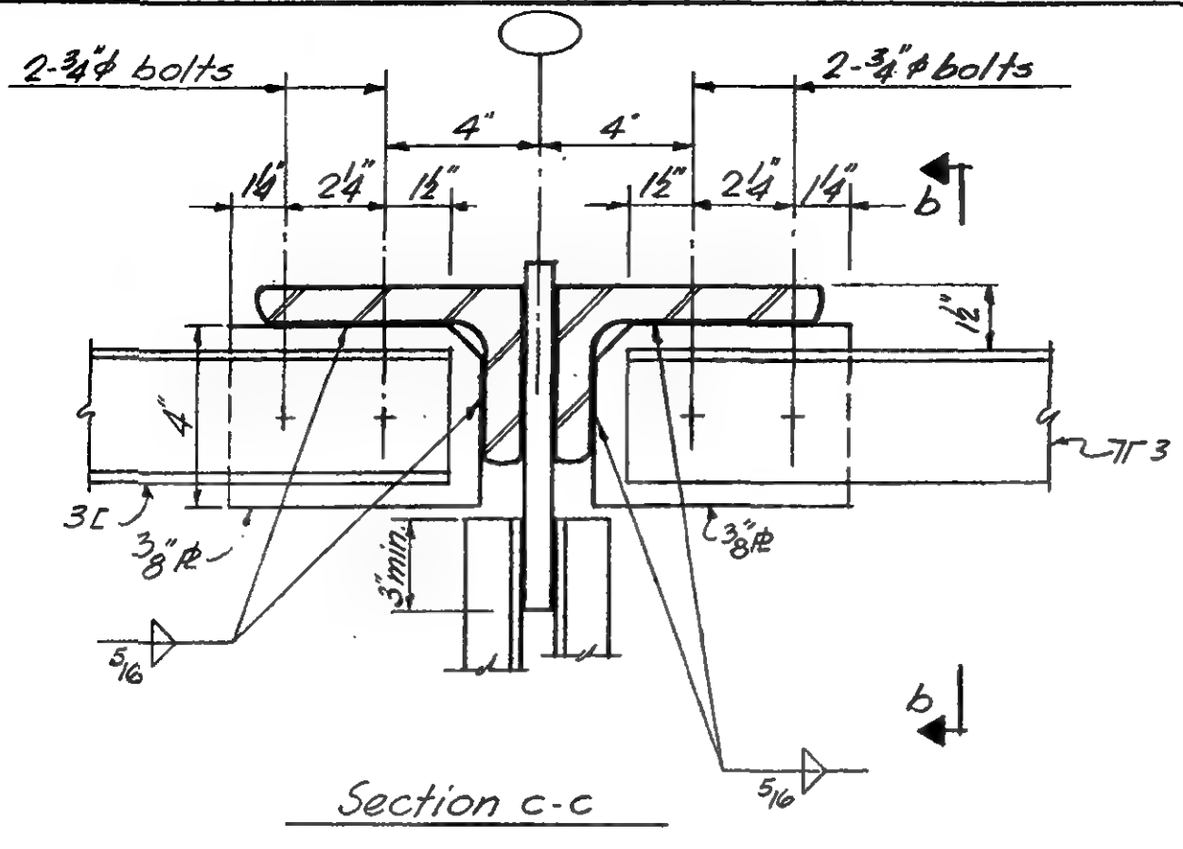

Section c-c

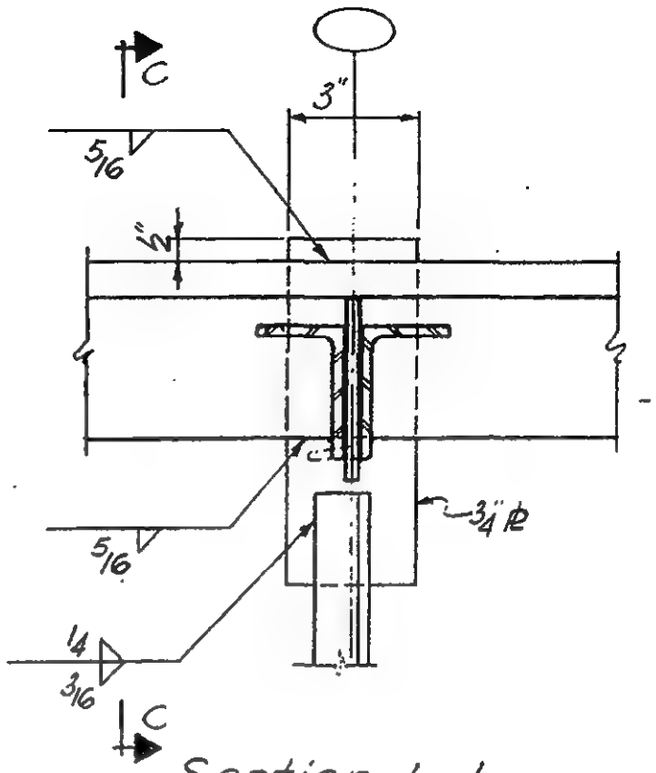

Section b-b

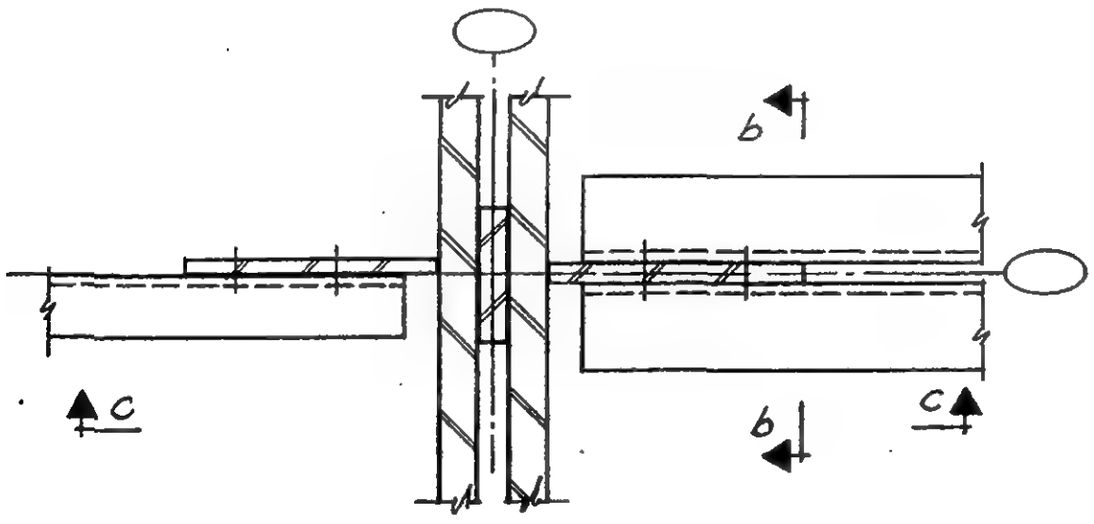

Plan

See 7-B7 for truss elev.

LICENSED PROFESSIONAL ENGINEER
LESLIE E. ROBERTSON
No. 34360
UNIVERSITY OF THE STATE OF NEW YORK

DESIGNED K. Hwang
DRAWN J. Gricius
REVIEWED W. Brewer R.

7-B8-4.2

SKILLING, HELLE, CHRISTIANSEN, ROBERTSON — Structural & Civil Engineers

PROJECT: THE WORLD TRADE CENTER | TITLE: FLOOR TRUSS DETAIL 4.5 | DATE: 3-19-69

REVISIONS

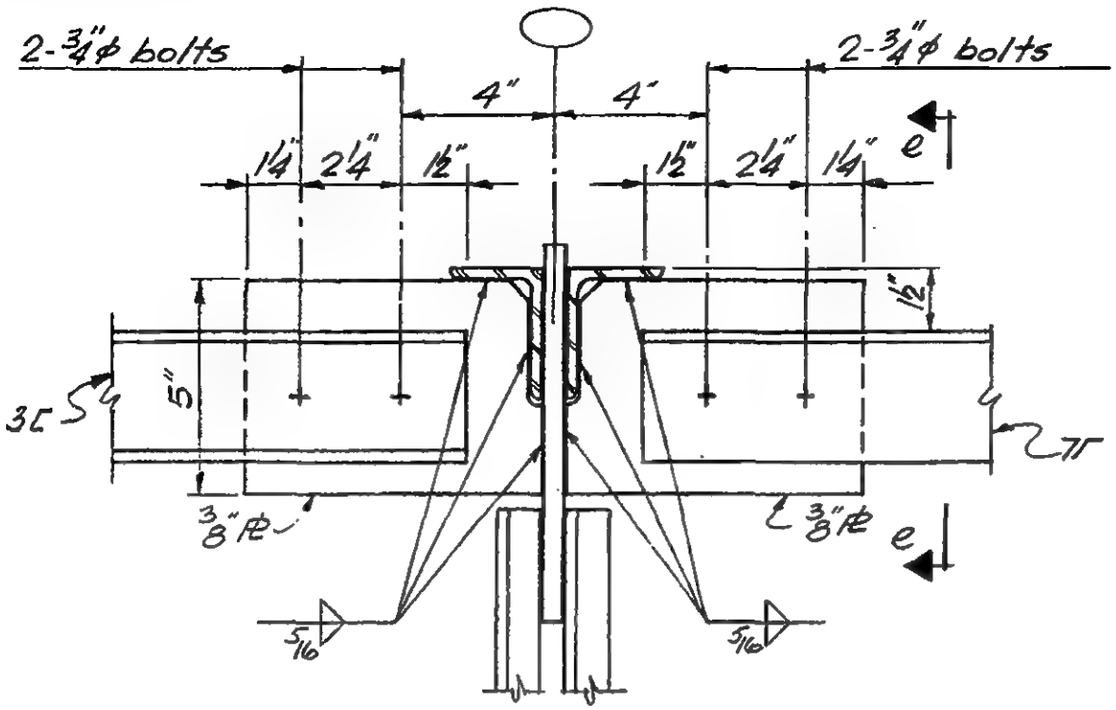

Section d-d

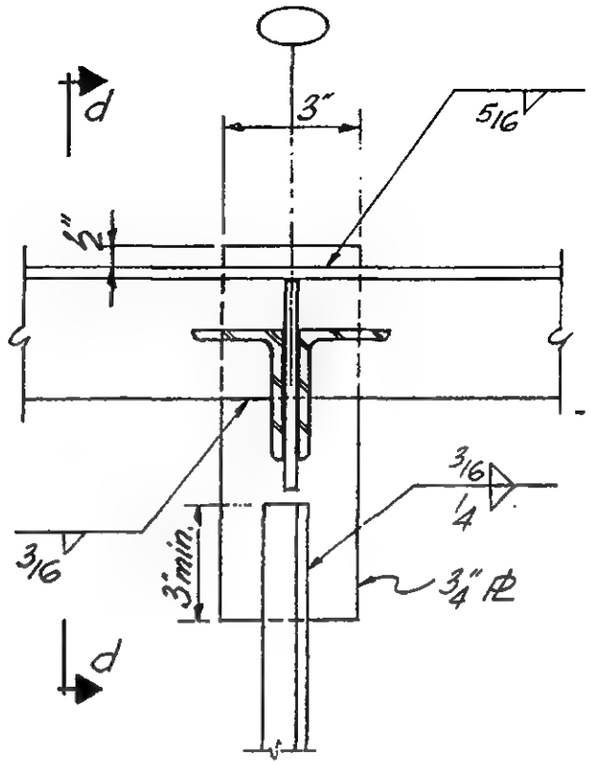

Section e-e

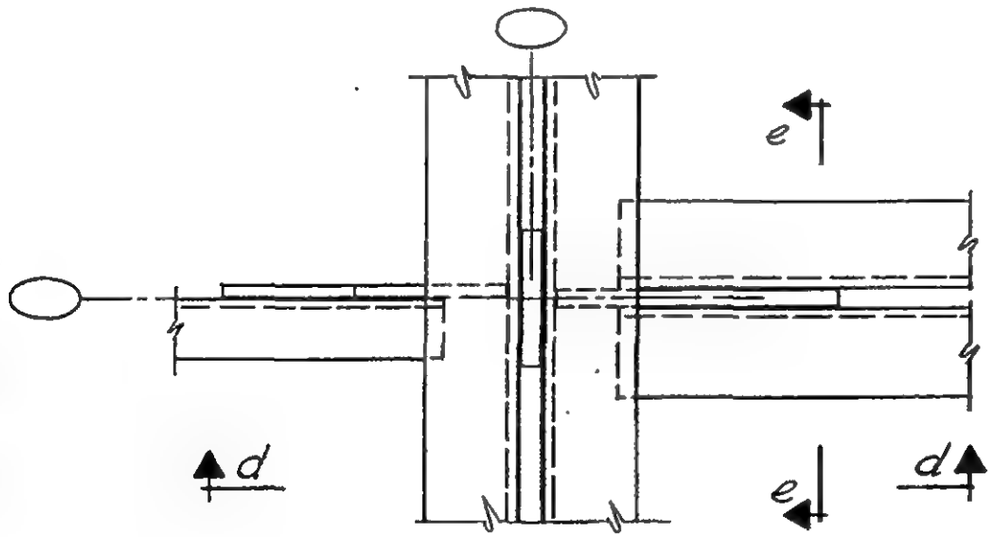

Plan

See 7-B7 for truss elev.

LICENSED PROFESSIONAL ENGINEER
LESLIE E. ROBERTSON
No. 34360
UNIVERSITY OF THE STATE OF NEW YORK

DESIGNED K. Hwang
DRAWN J. Gricius
REVIEWED W. Brewer

7-B8-4.3

SKILLING, HELLE, CHRISTIANSEN, ROBERTSON — Structural & Civil Engineers

PROJECT THE WORLD TRADE CENTER | TITLE FLOOR TRUSS DETAIL 4.6 | DATE 3-19-69

REVISIONS

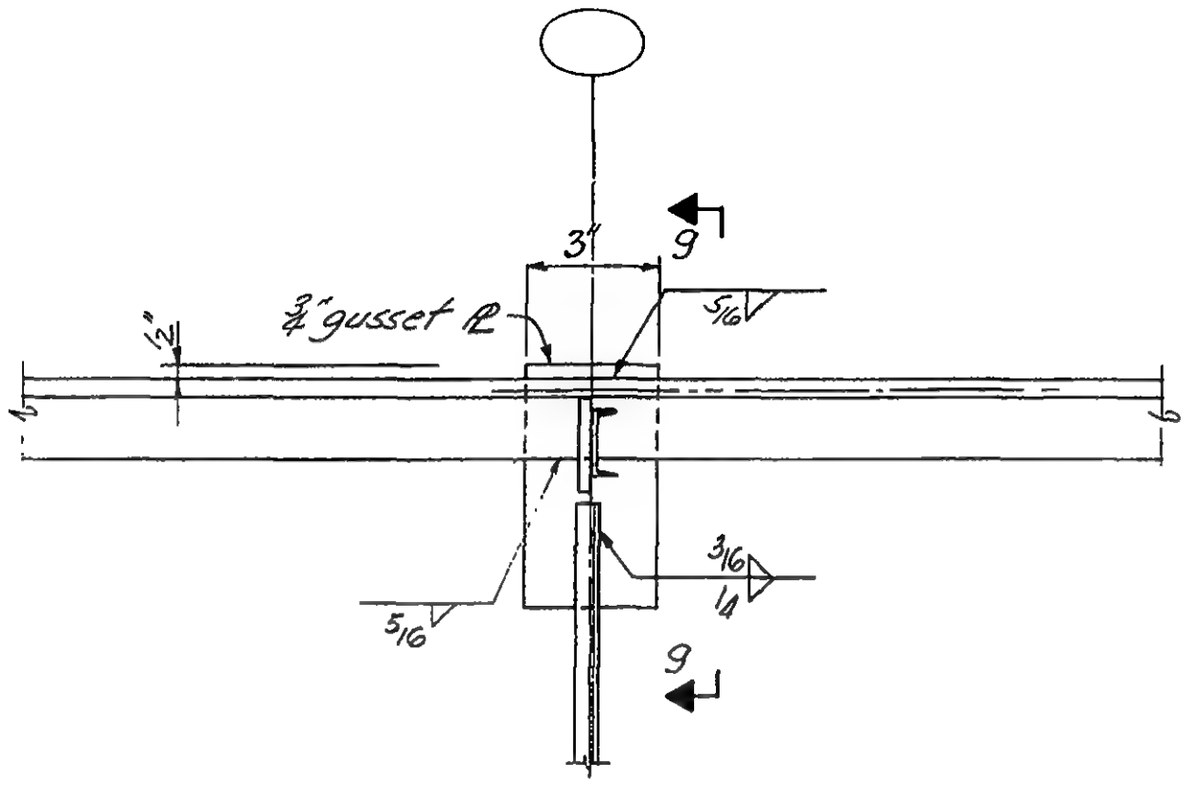

Section f-f

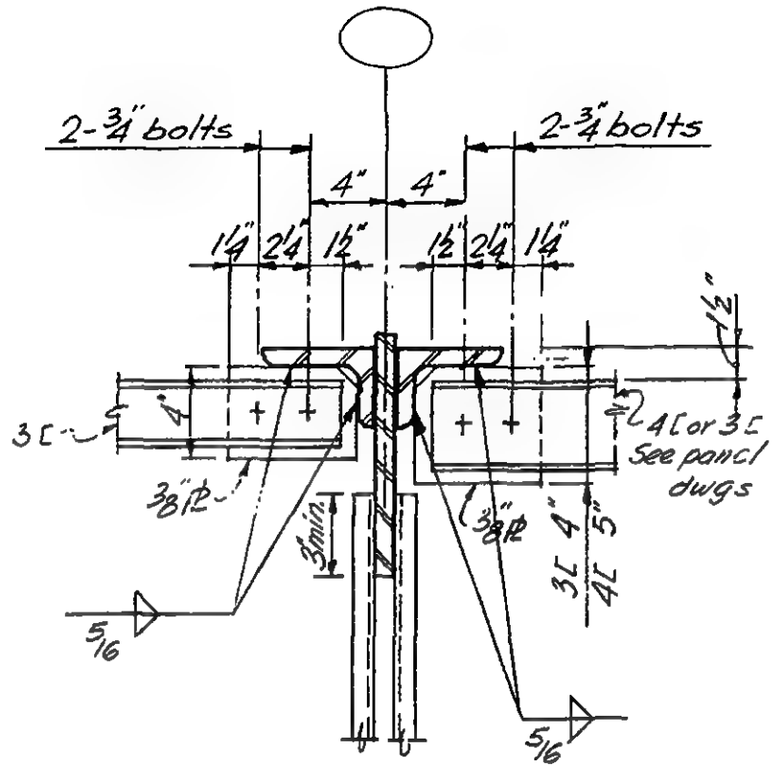

Section 9-9

See 7-B7 for truss elev.

LICENSED PROFESSIONAL ENGINEER
LESLIE E. ROBERTSON
No. 34960
UNIVERSITY OF THE STATE OF NEW YORK

DESIGNED K. Hwang
DRAWN J. Adams
REVIEWED W. Brewer

7-BB-4.4

SKILLING, HELLE, CHRISTIANSEN, ROBERTSON — Structural & Civil Engineers

PROJECT: THE WORLD TRADE CENTER | TITLE: FLOOR TRUSS DETAIL 5.1 | DATE: 3-19-69

REVISIONS

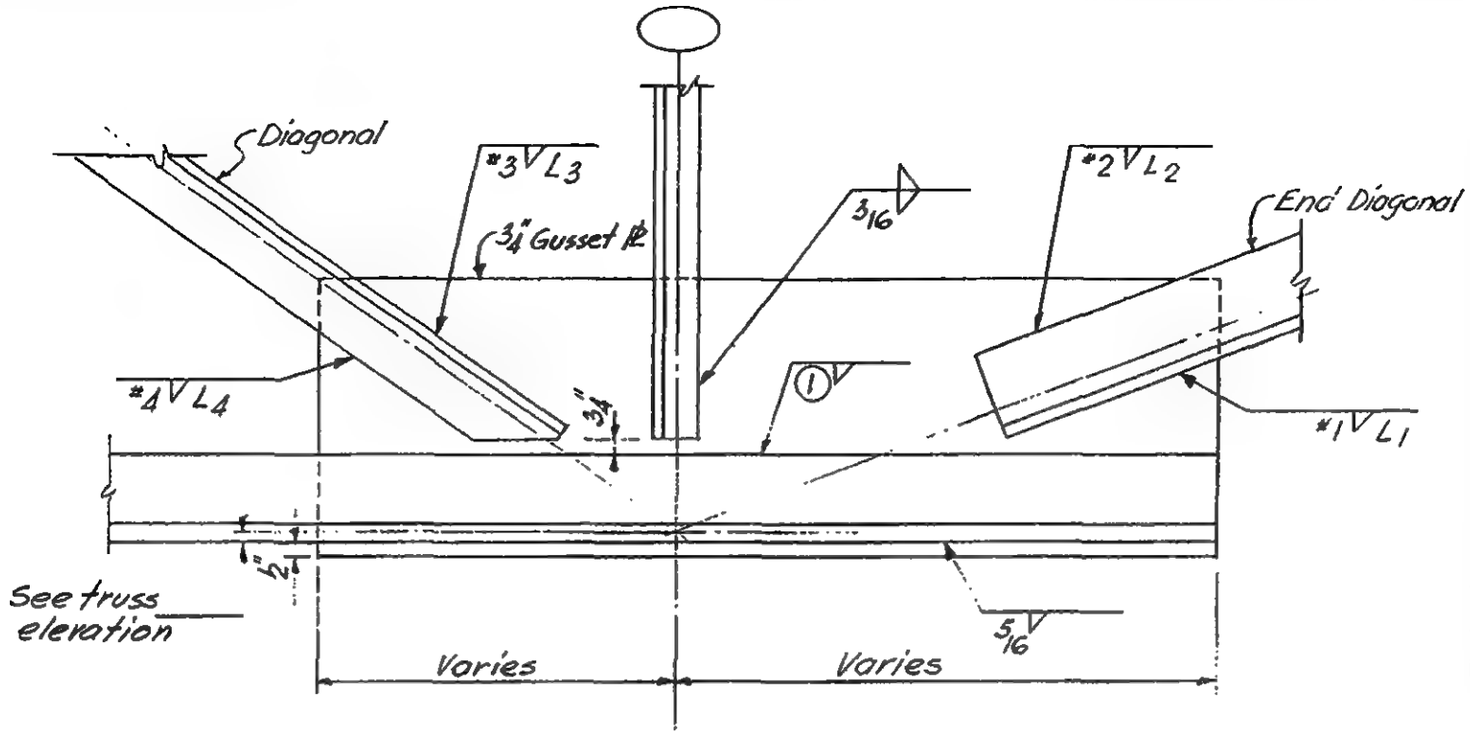

Member size	End Diagonal			
	Weld #1	L_1	Weld #2	L_2
1¼ x 1¼ x ¼	¼	6	3/16	4
1¾ x 1¾ x ¼	5/16	6	3/16	4
3 x 2 x ¼	3/8	6	3/16	6
2½ x 2 x 5/16	3/8	7	¼	5
2½ x 2 x 3/8	3/8	8	¼	6
3 x 2 x 7/16	3/8	9	5/16	6
3 x 2 x 3/8	3/8	9	5/16	6
3 x 2 x ½	7/16	9	3/8	6
4 x 3½ x 3/8	9/16	10	5/16	7
4 x 3½ x ½	11/16	10	7/16	7
2½ x 2 x ¼	3/8	6	3/16	6

Note (1)
¼" for JL ≤ to ¾" thick
5/16" for JL > than ¾" thick

See 7-B7 for truss elevations

Member size	Diagonal			
	Weld #3	L_3	Weld #4	L_4
1¾ x 1¼ x ¼	¼	4	3/16	4
2 x 1½ x ¼	5/16	5	3/16	5
2½ x 1½ x ¼	5/16	6	3/16	5
2½ x 2 x ¼	5/16	6	3/16	5
2½ x 2 x 5/16	5/16	6	¼	5
3 x 2 x ¼	5/16	7	3/16	5
3 x 2 x 7/16	5/16	9	5/16	6
3 x 2 x ½	7/16	9	5/16	6
3 x 2½ x ½	7/16	9	5/16	6

LICENSED PROFESSIONAL ENGINEER — LESLIE E. ROBERTSON — No. 34960 — UNIVERSITY OF THE STATE OF NEW YORK

DESIGNED K. Hwang
DRAWN J. Gricius
REVIEWED W. Brewer

7-B8-5.1

SKILLING, HELLE, CHRISTIANSEN, ROBERTSON — Structural & Civil Engineers

PROJECT: THE WORLD TRADE CENTER | TITLE: FLOOR TRUSS DETAIL 5.2 | DATE: 3-19-69

REVISIONS

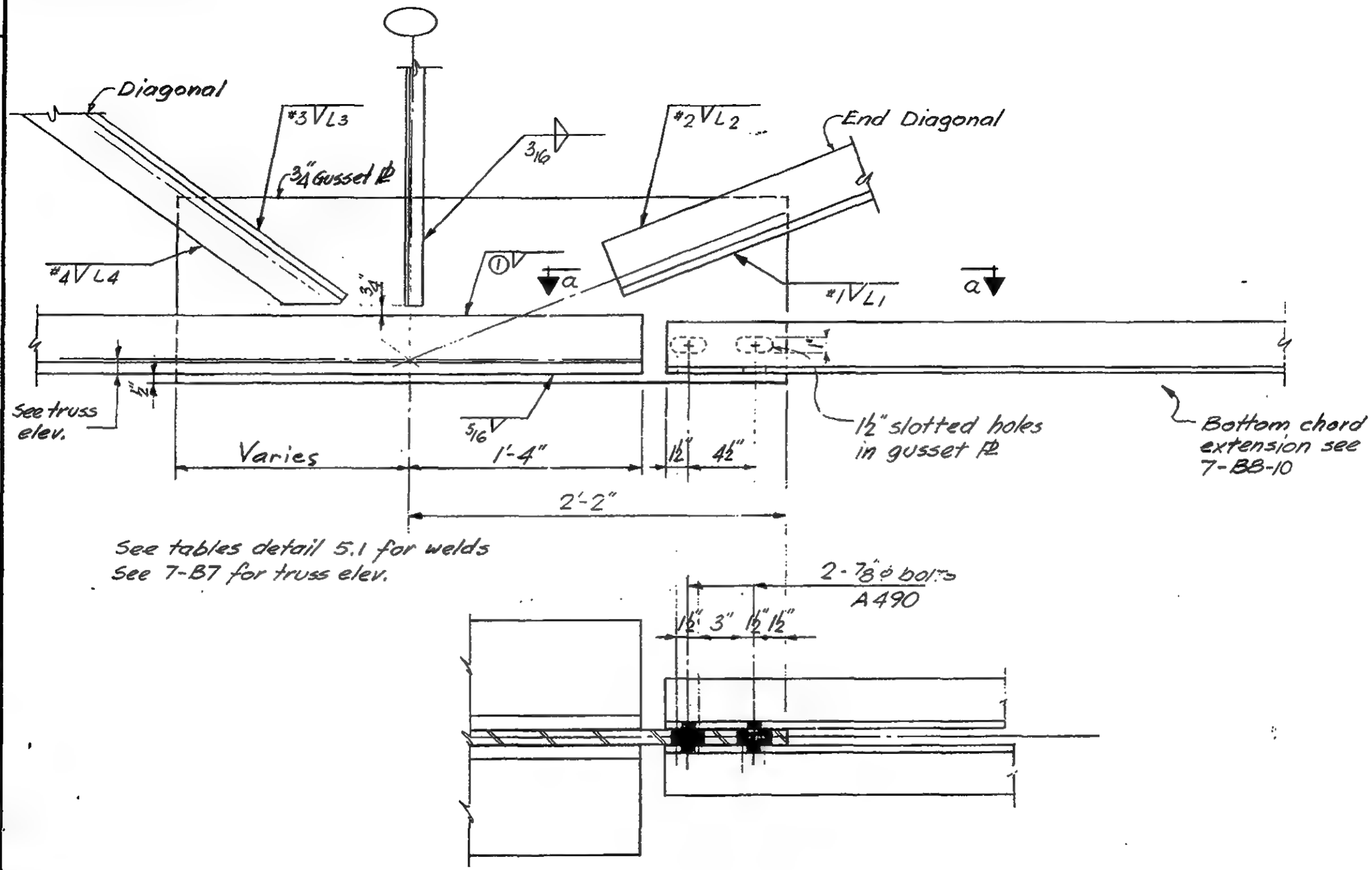

See tables detail 5.1 for welds
See 7-B7 for truss elev.

Section a-a

LICENSED PROFESSIONAL ENGINEER — LESLIE E. ROBERTSON — No. 34360 — UNIVERSITY OF THE STATE OF NEW YORK

DESIGNED K. Hwang
DRAWN J. Gricius
REVIEWED W. Brewer

7-B8-5.2

SKILLING, HELLE, CHRISTIANSEN, ROBERTSON — Structural & Civil Engineers

PROJECT: THE WORLD TRADE CENTER | TITLE: FLOOR TRUSS DETAIL 5.3 | DATE: 3-19-69

REVISIONS

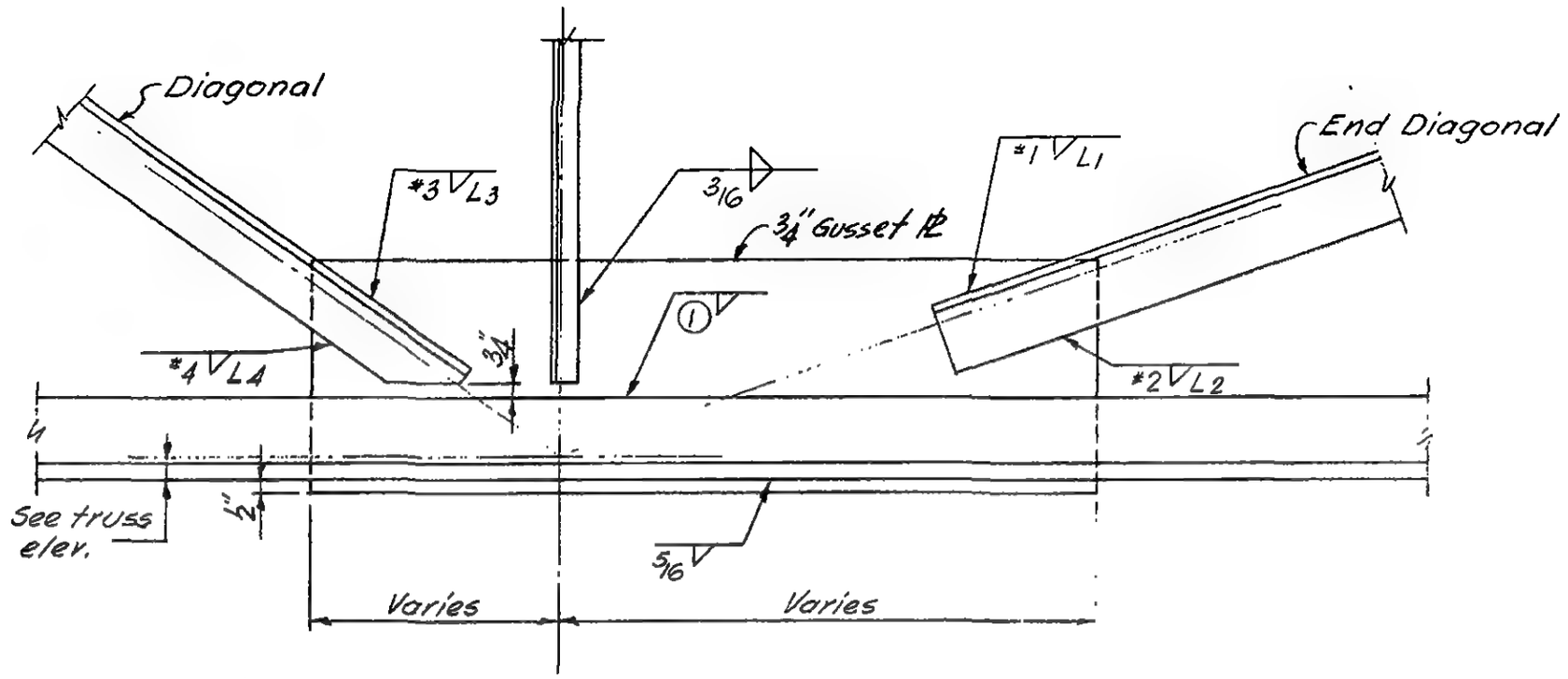

See table Det. 5.1 for welds
See 7-B7 for truss elev.

LICENSED PROFESSIONAL ENGINEER
LESLIE E. ROBERTSON
No. 34360
UNIVERSITY OF THE STATE OF NEW YORK

DESIGNED K. Hwang
DRAWN J. Gricius
REVIEWED W. Brewer

7-B8-5.3

SKILLING, HELLE, CHRISTIANSEN, ROBERTSON — Structural & Civil Engineers

PROJECT: THE WORLD TRADE CENTER | TITLE: FLOOR TRUSS DETAIL 6.1 | DATE: 3-19-69

REVISIONS

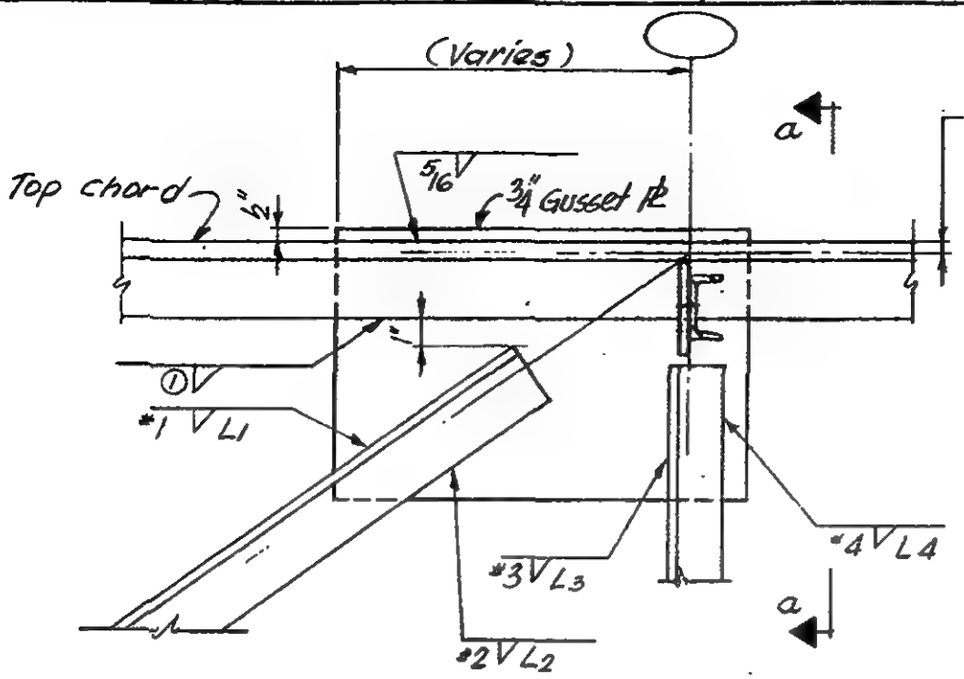

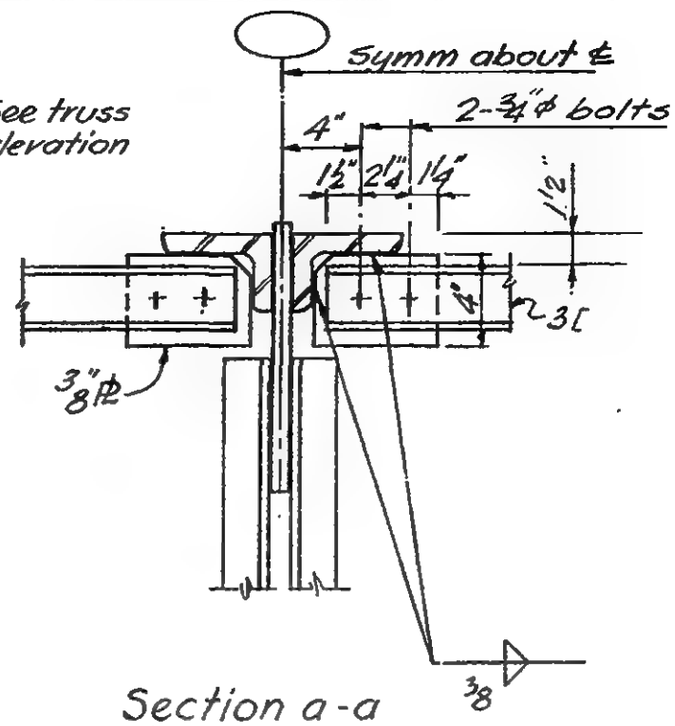

Section a-a

Note ①
1/4" for tr ≤ to 3/4" thick
5/8" for tr > 3/4" thick
See 7-B7 for truss elevation

Member size	Diagonal			
	Weld #1	L_1	Weld #2	L_2
1¾ × 1¾ × ¼	5/16	6	3/16	4
2½ × 1½ × ¼	1/4	7	3/16	5
2½ × 2 × ¼	5/16	7	3/16	5
1¼ × 1¼ × ¼	1/4	6	3/16	4
1 × 1 × ¼	1/4	6	3/16	4

Member size	Vertical				
	Weld #3	L_3	Weld #4	L_4	Weld #5
1¾ × 1¼ × ¼	1/4	4	3/16	4	—
2½ × 1½ × ¼	5/16	5	3/16	5	—
2½ × 2 × 5/16	7/16	5	1/4	5	—
2½ × 2 × 3/8	1/2	5	1/4	5	—
2½ × 2 × ¼	7/16	5	3/16	5	
1¼ × 1¼ × ¼	3/16	5	3/16	5	

LICENSED PROFESSIONAL ENGINEER — LESLIE E. ROBERTSON — No. 34960 — UNIVERSITY OF THE STATE OF NEW YORK

DESIGNED: K. Hwang
DRAWN: A.L. FRANQUI
REVIEWED: W. Brewer

7-B8-6.1

SKILLING, HELLE, CHRISTIANSEN, ROBERTSON — Structural & Civil Engineers

PROJECT: THE WORLD TRADE CENTER | TITLE: FLOOR TRUSS DETAIL 6.2 & 6.3 | DATE: 3-19-69

REVISIONS

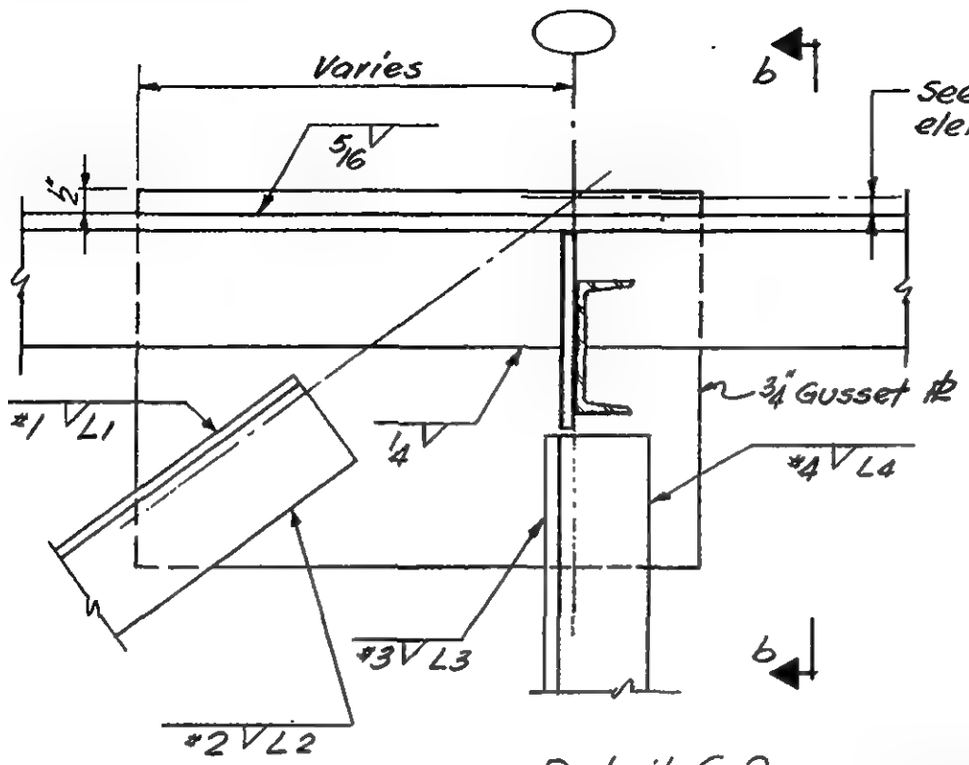

Detail 6.2

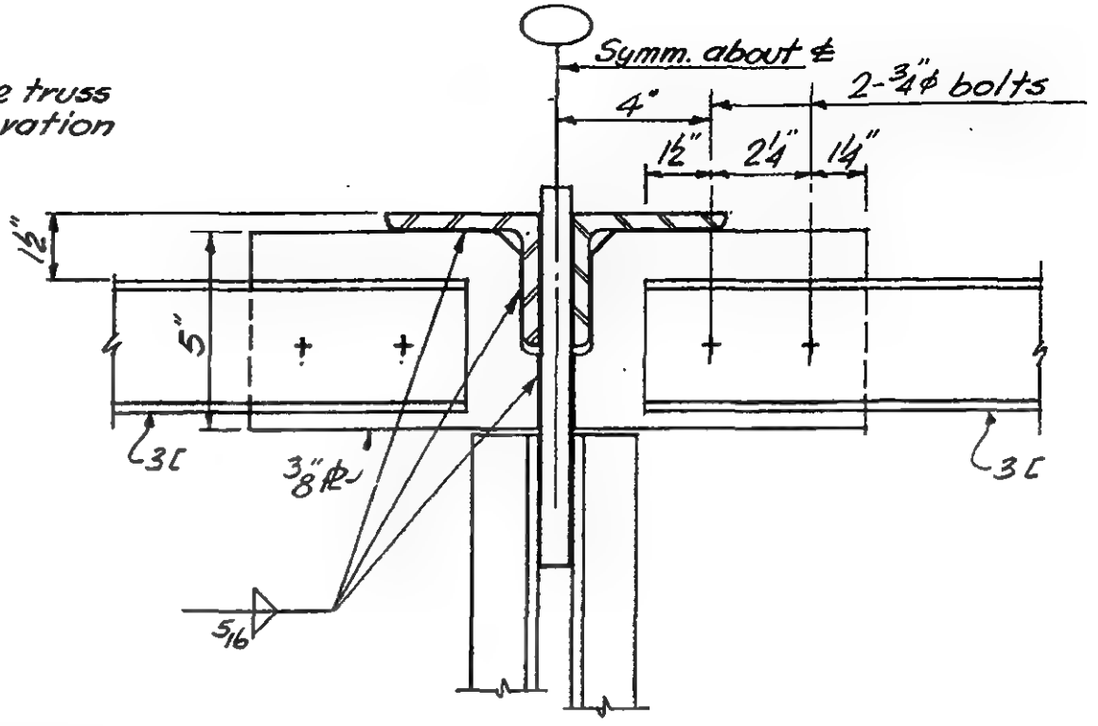

Section b-b

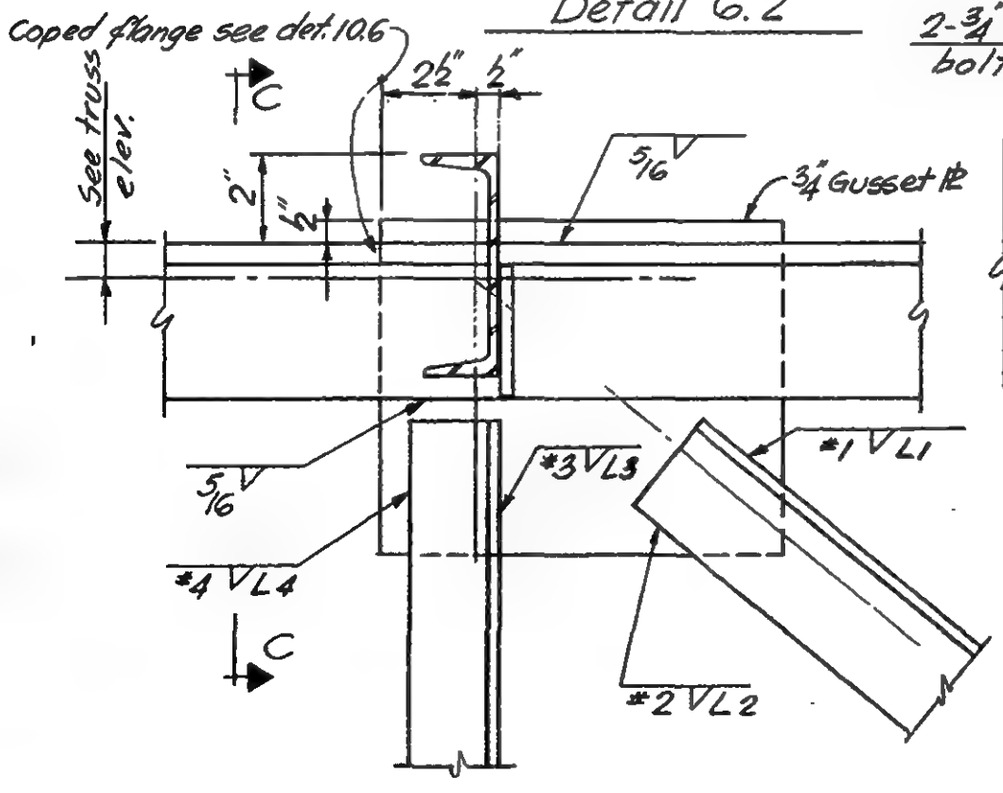

Detail 6.3

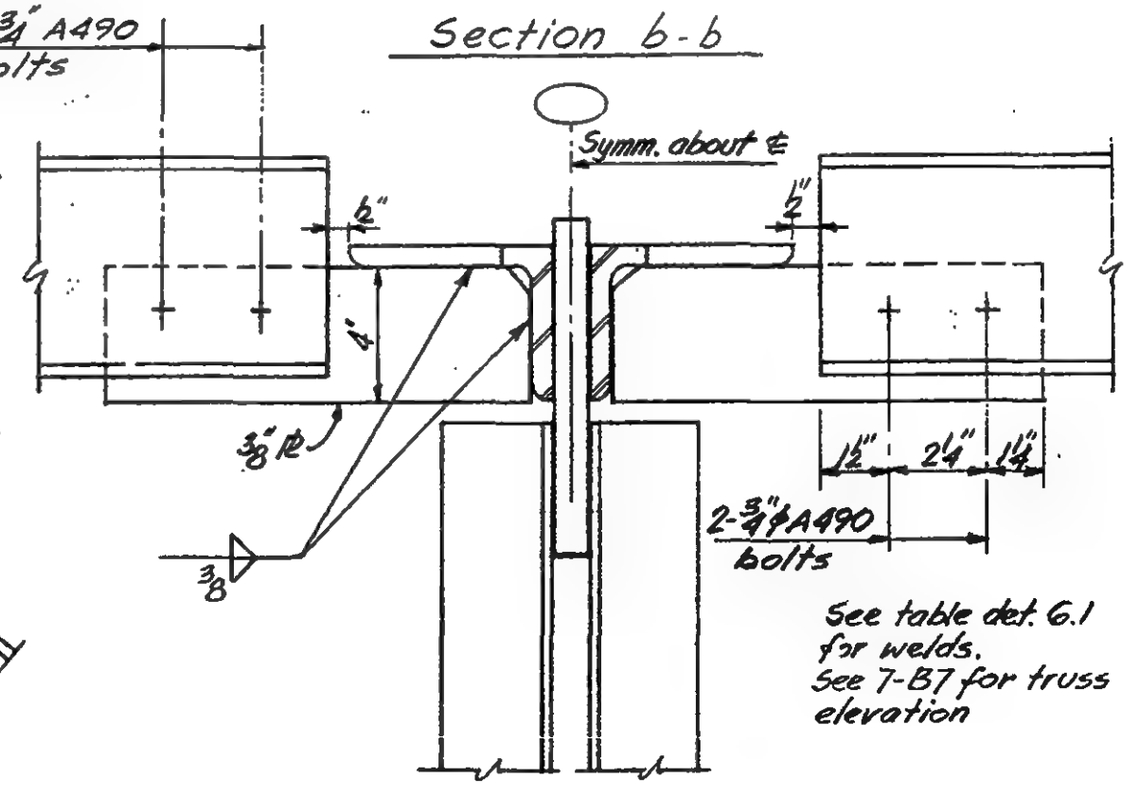

See table det. 6.1 for welds.
See 7-B7 for truss elevation

Section c-c

LICENSED PROFESSIONAL ENGINEER — LESLIE E. ROBERTSON — No. 34960 — UNIVERSITY OF THE STATE OF NEW YORK

DESIGNED K. Hwang
DRAWN J. Gricius
REVIEWED W. Brewer

R.

7-B8-6.2

SKILLING, HELLE, CHRISTIANSEN, ROBERTSON — Structural & Civil Engineers

PROJECT: THE WORLD TRADE CENTER | TITLE: FLOOR TRUSS DETAIL 7.1 7.3 7.5 | DATE: 3-19-69

REVISIONS

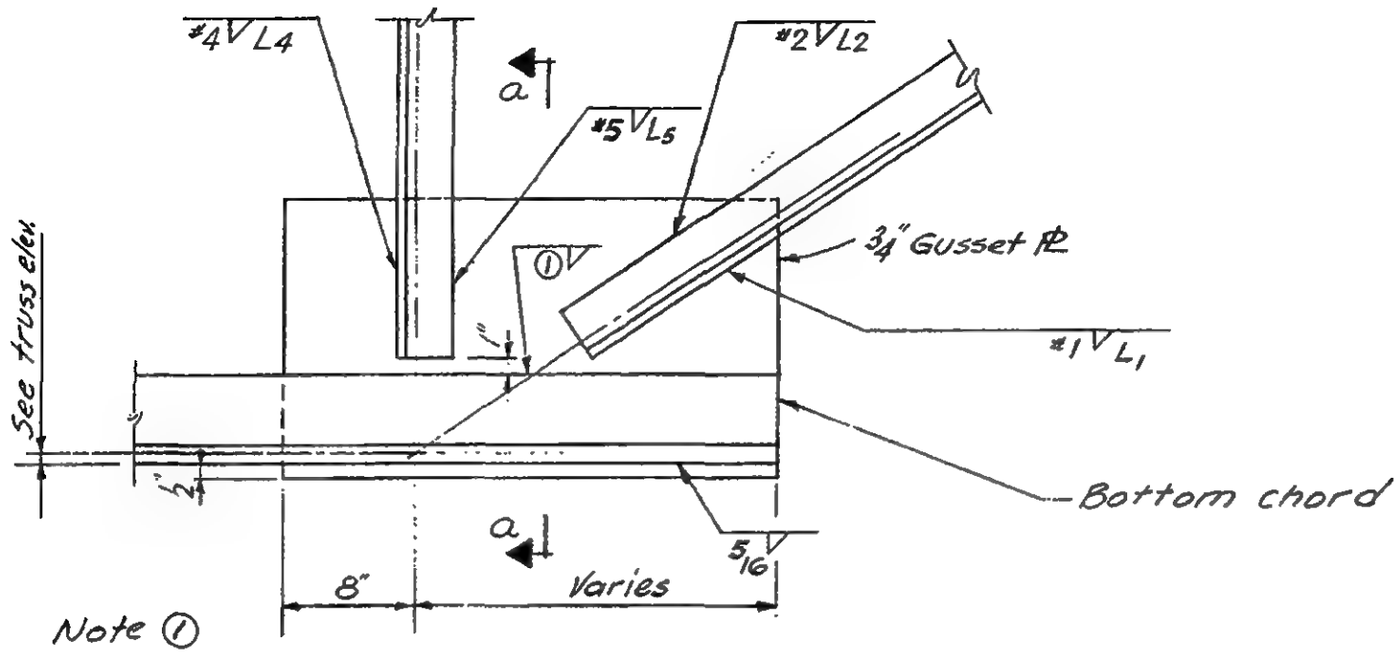

Note ①
1/4" for PL ≤ to 3/4" thick
5/8" for PL > 3/4" thick
See 7-B7 for truss elevation.

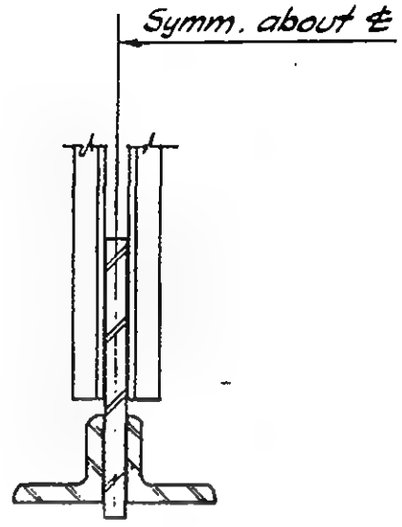

Section a-a

Member size	Diagonal				Detail
	Weld #1	L_1	Weld #2	L_2	
1¼×1¼×¼	¼	6	3/16	4	7.5
1¾×1¾×¼	5/16	6	3/16	4	7.3 & 7.5
2½×1½×5/16	3/8	6	¼	5	7.3
2½×2×¼	3/8	6	3/16	5	7.1
2½×2×5/16	3/8	7	¼	5	7.1
4×3½×½	11/16	10	7/16	8	7.6

Member size	Vertical				Detail
	Weld #4	L_4	Weld #5	L_5	
1¼×1¼×¼	3/16	5	3/16	5	7.5
1¾×1¼×¼	¼	4	3/16	4	7.1 & 7.5
2½×1½×¼	5/16	5	3/16	5	7.1
2½×2×¼	3/8	5	3/16	5	7.3

LICENSED PROFESSIONAL ENGINEER — LESLIE E. ROBERTSON — No. 34360 — UNIVERSITY OF THE STATE OF NEW YORK

DESIGNED K. Hwang
DRAWN A.L. FRANQUI
REVIEWED W. Brewer

7-B8-7.1

SKILLING, HELLE, CHRISTIANSEN, ROBERTSON — Structural & Civil Engineers

PROJECT: THE WORLD TRADE CENTER | TITLE: FLOOR TRUSS DETAIL 7.2 | DATE: 3-19-69

REVISIONS

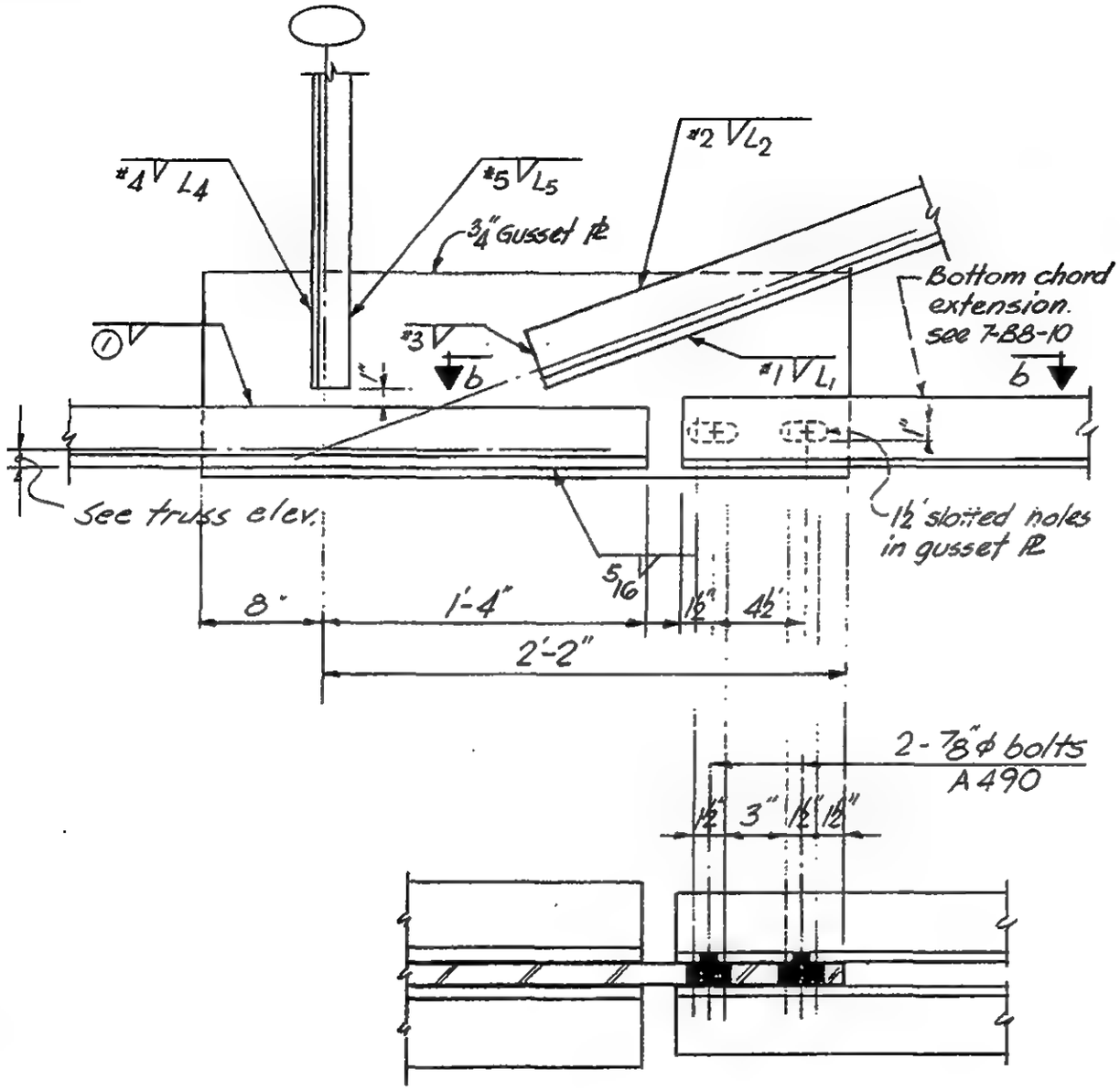

Section b-b

See 7-B7 for truss elev.

Member size	Diagonal				
	Weld #1	L1	Weld #2	L2	Weld #3
2½ × 2 × 5/16	3/5	7	1/4	5	—
2½ × 2 × 3/8	5/16	9	1/4	6	—
3 × 2 × 3/8	3/8	9	5/16	6	—
3 × 2 × ½	3/8	9	5/16	6	7/16
4 × 3 × 3/8	7/16	9	5/16	6	5/16

Member size	Vertical			
	Weld #4	L4	Weld #5	L5
1¼ × 1¼ × ¼	3/16	5	3/16	5
2½ × 1½ × ¼	5/16	5	3/16	5
2½ × 2 × 5/16	7/16	5	1/4	5
2½ × 2 × 3/8	½	5	1/4	5

LICENSED PROFESSIONAL ENGINEER — LESLIE E. ROBERTSON — No. 34360 — UNIVERSITY OF THE STATE OF NEW YORK

DESIGNED K. Hwang
DRAWN J. Gricius
REVIEWED W. Brewer

7-B8-7.2

SKILLING, HELLE, CHRISTIANSEN, ROBERTSON — Structural & Civil Engineers

PROJECT: THE WORLD TRADE CENTER | TITLE: FLOOR TRUSS DETAIL 7.4 | DATE: 3-19-69

REVISIONS

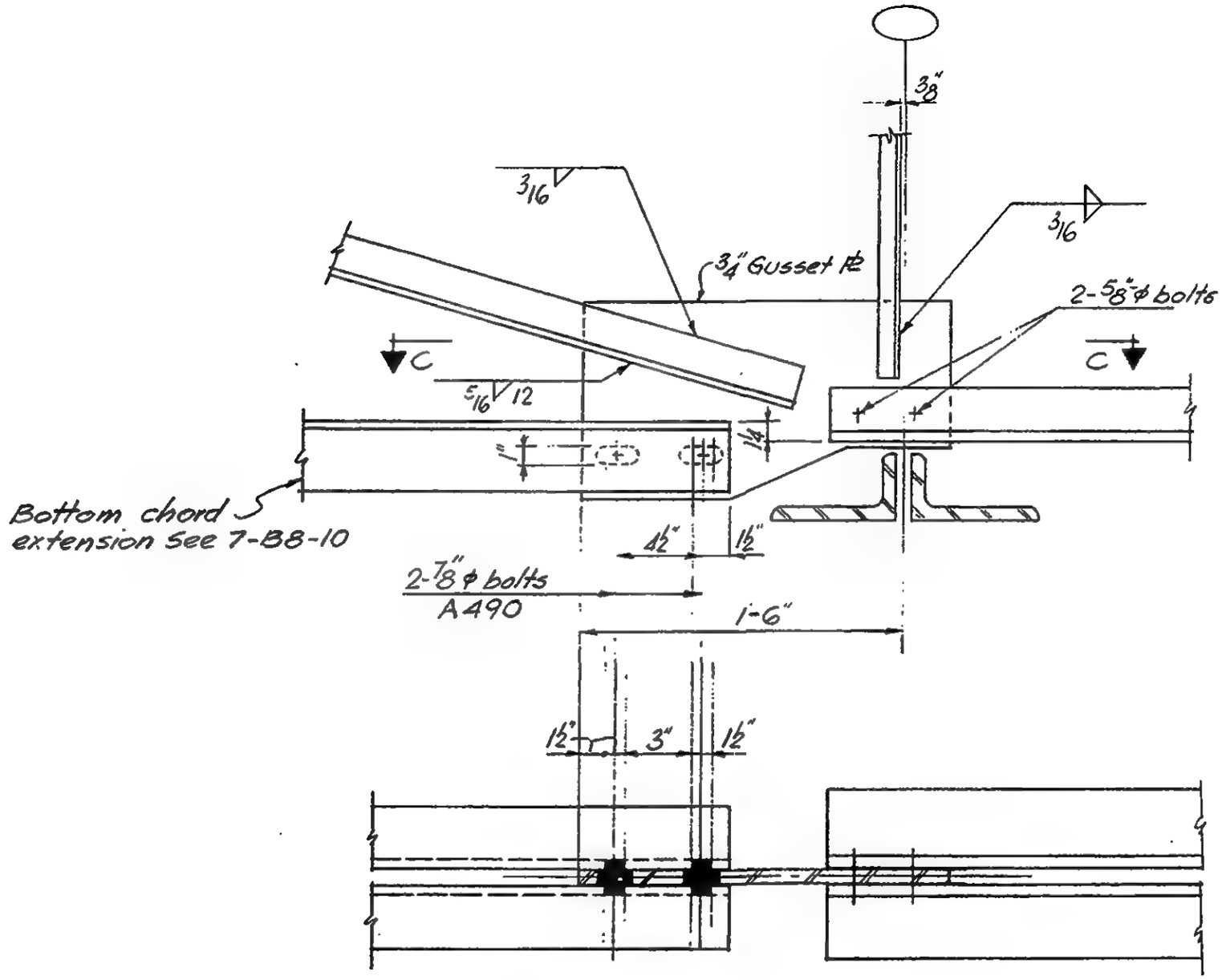

Section C-C

See 7-B7 for truss elevation.

LICENSED PROFESSIONAL ENGINEER
LESLIE E. ROBERTSON
No. 34960
UNIVERSITY OF THE STATE OF NEW YORK

DESIGNED K. Hwang
DRAWN J. Gricius
REVIEWED W. Brewer

7-B8-7.3

SKILLING, HELLE, CHRISTIANSEN, ROBERTSON — Structural & Civil Engineers

PROJECT: THE WORLD TRADE CENTER | TITLE: FLOOR TRUSS DETAIL 8.1 | DATE: 3-19-69

REVISIONS

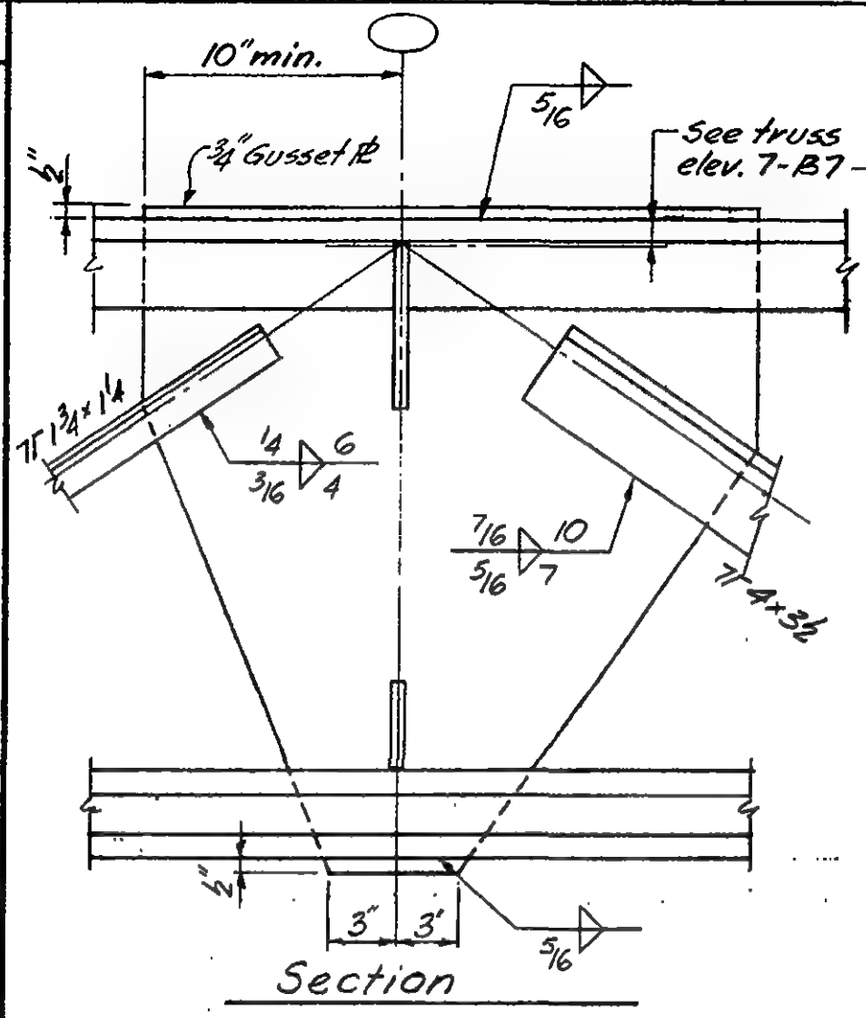

Section

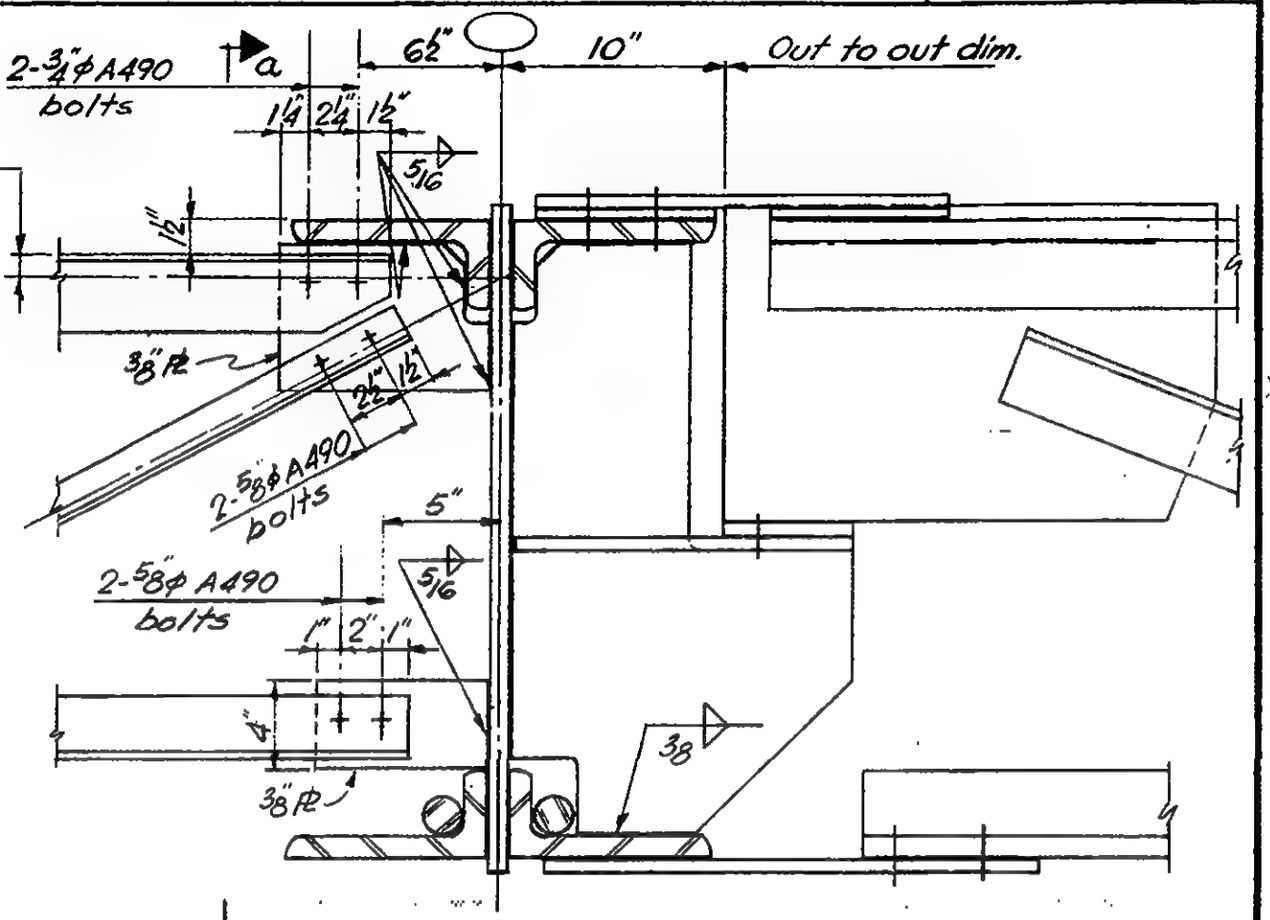

DETAIL 8.1 same as Section A-A (7-B8-8.10) except as shown

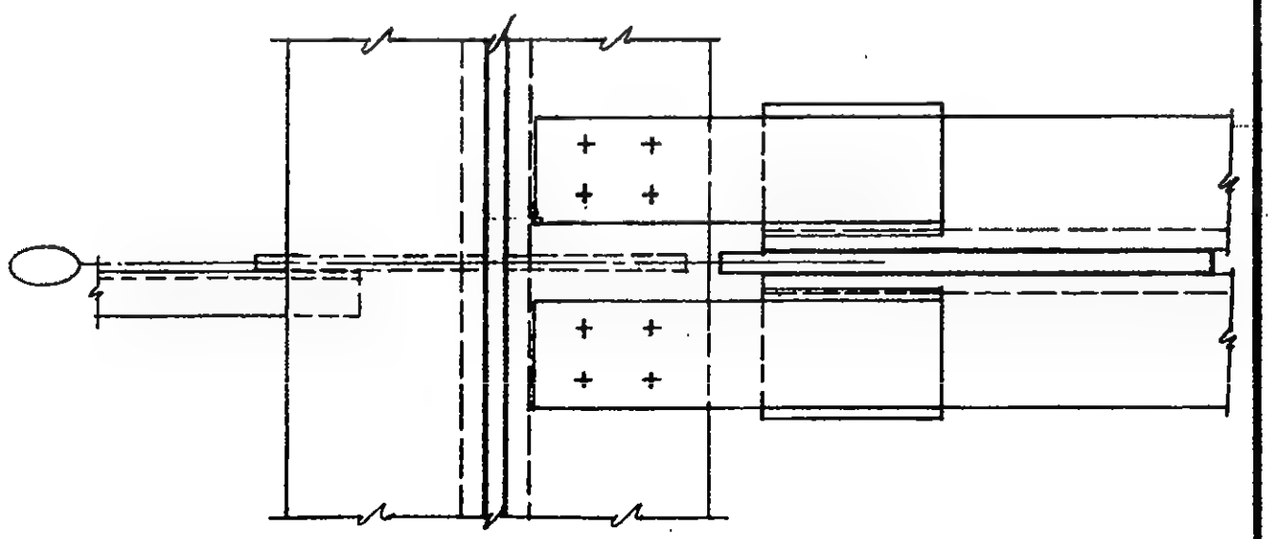

Plan same as section B-B (7-B8-8.10) except as shown

LICENSED PROFESSIONAL ENGINEER — LESLIE E. ROBERTSON — No. 34360 — UNIVERSITY OF THE STATE OF NEW YORK

DESIGNED K. Hwang

DRAWN J. Gricius

REVIEWED W. Brewer

7-B8-8.1

SKILLING, HELLE, CHRISTIANSEN, ROBERTSON — Structural & Civil Engineers

PROJECT: THE WORLD TRADE CENTER | TITLE: FLOOR TRUSS DETAIL 8.2 | DATE: 3-19-69

REVISIONS

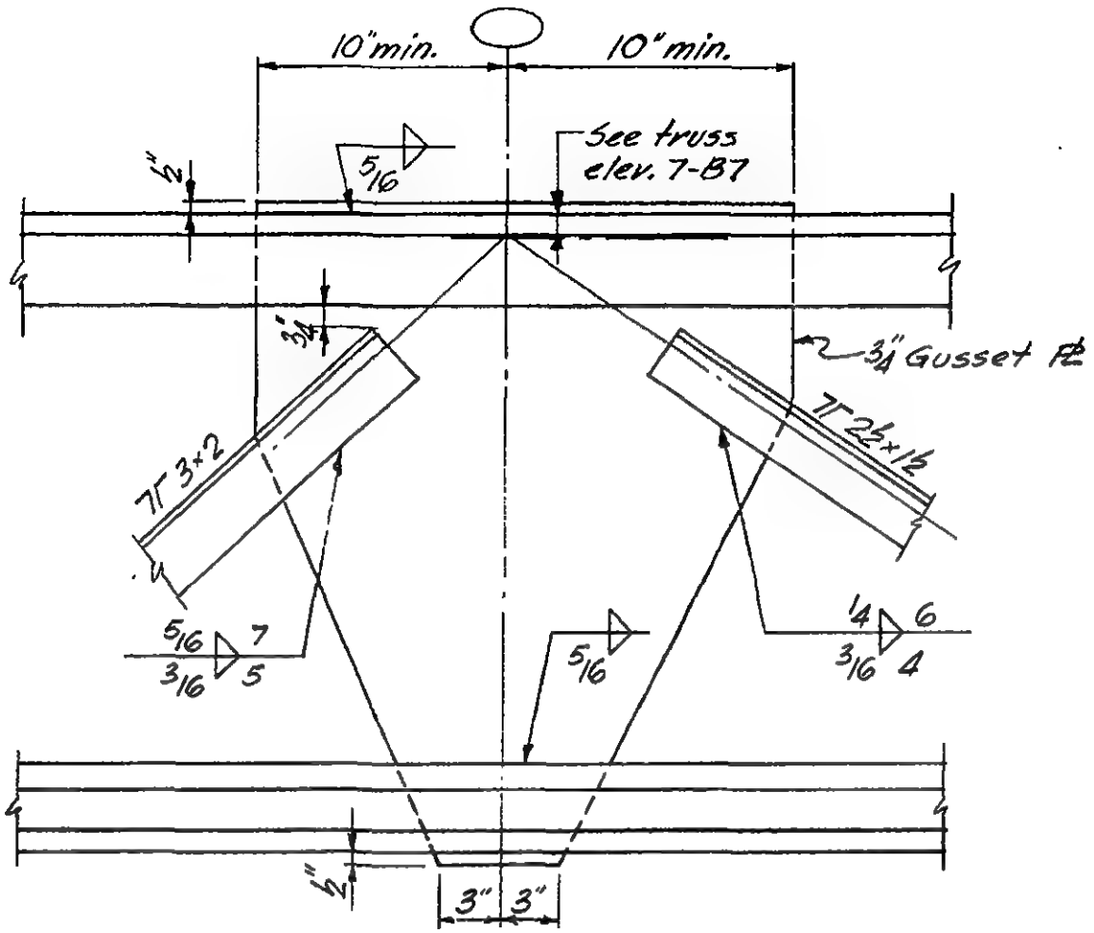

Section 6-b

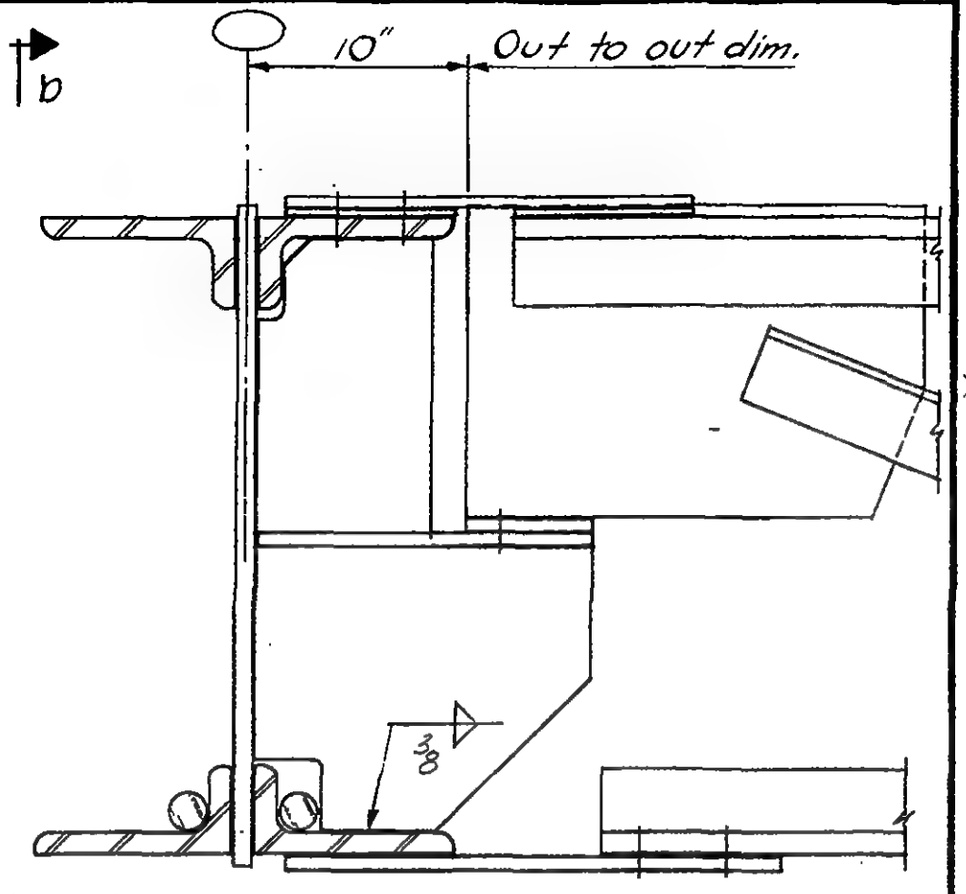

DETAIL 8.2 same as Section A-A (7-B8-8.10) except as shown

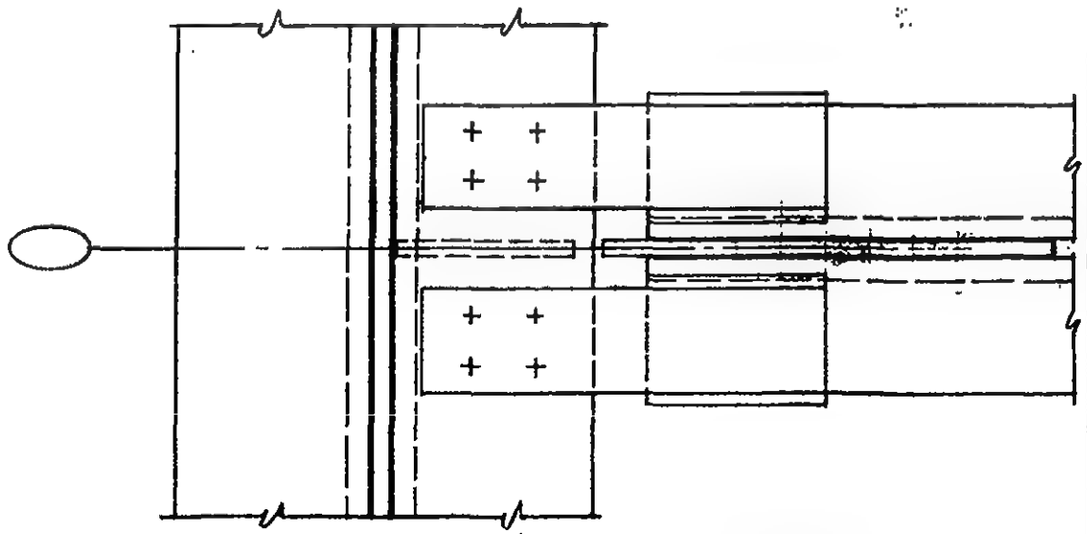

Plan same as section B-B (7-B8-8.10) except as shown

LICENSED PROFESSIONAL ENGINEER — LESLIE E. ROBERTSON — No. 34360 — UNIVERSITY OF THE STATE OF NEW YORK

DESIGNED K. Hwang

DRAWN J. Gricius

REVIEWED W. Brewer

7-B8-8.2

SKILLING, HELLE, CHRISTIANSEN, ROBERTSON — Structural & Civil Engineers

PROJECT: THE WORLD TRADE CENTER | TITLE: FLOOR TRUSS DETAIL 8.3 | DATE: 3-19-69

REVISIONS

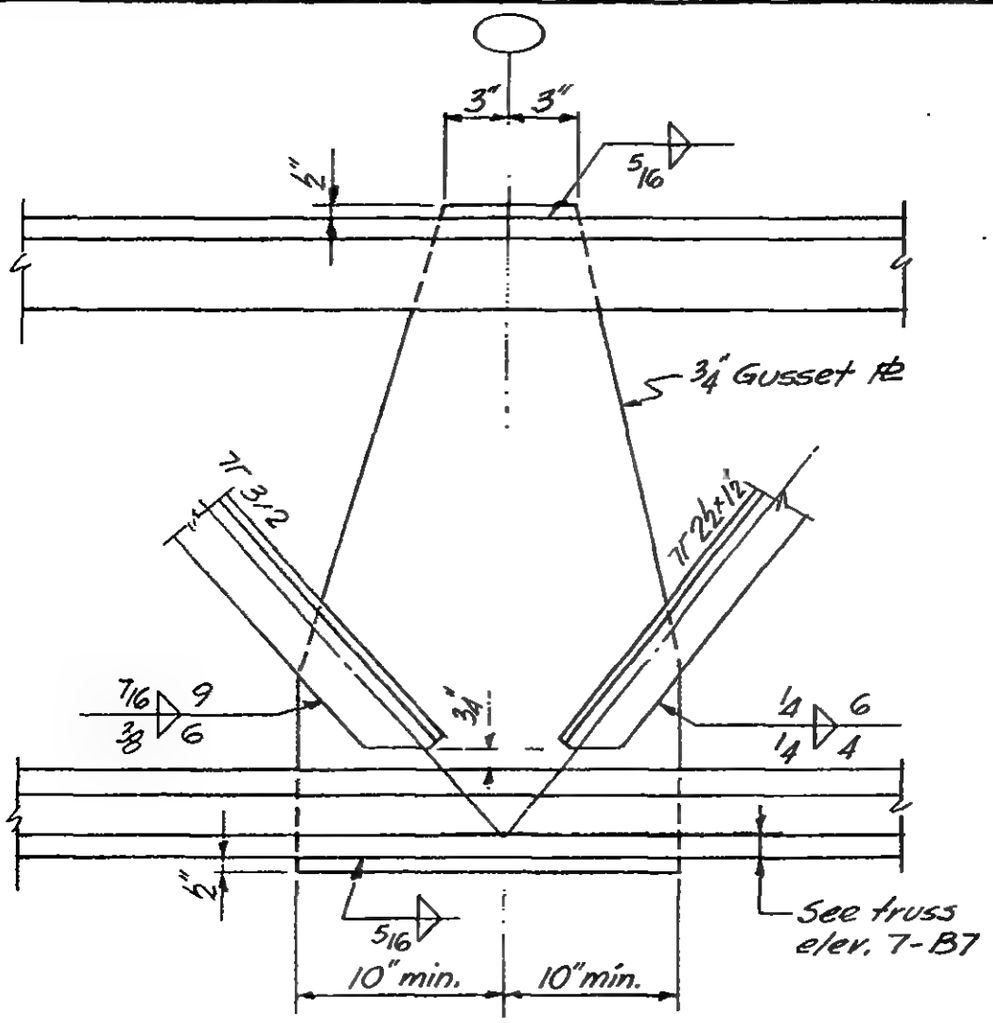

Section c-c

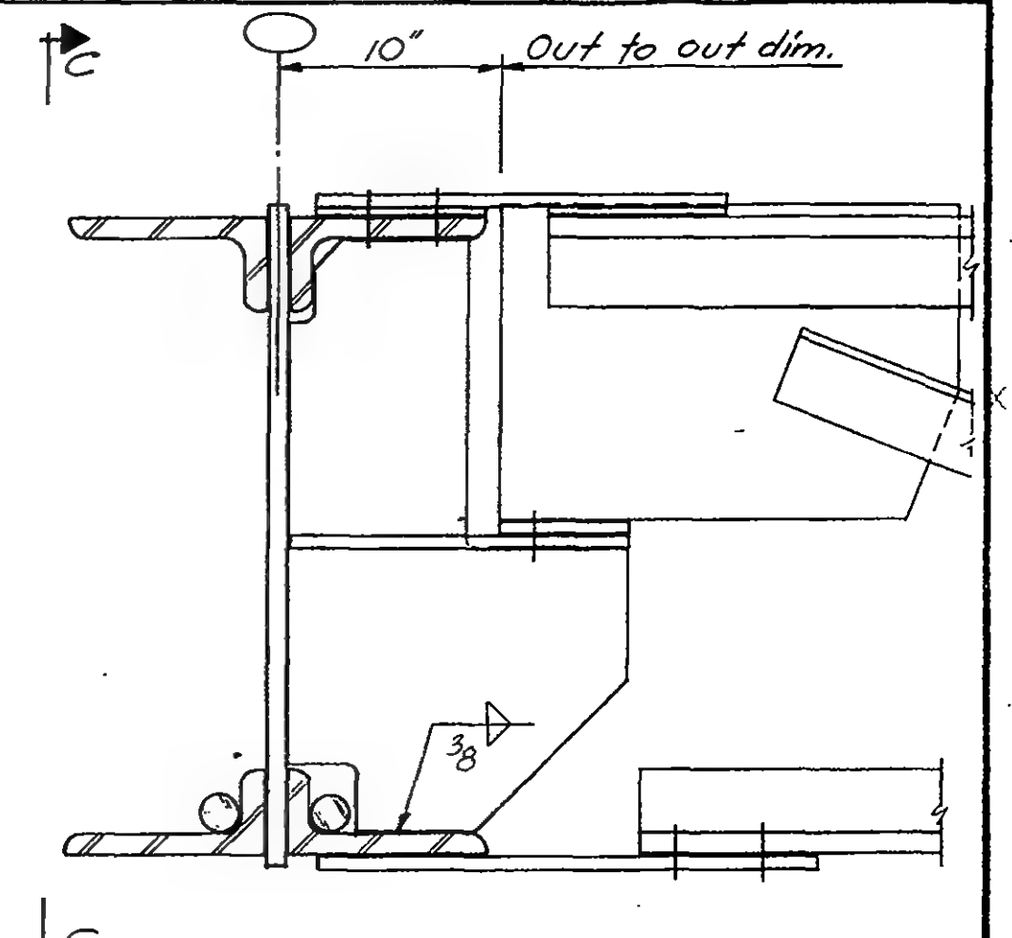

DETAIL 8.3 same as Section A-A (7-B8-8.10) except as shown

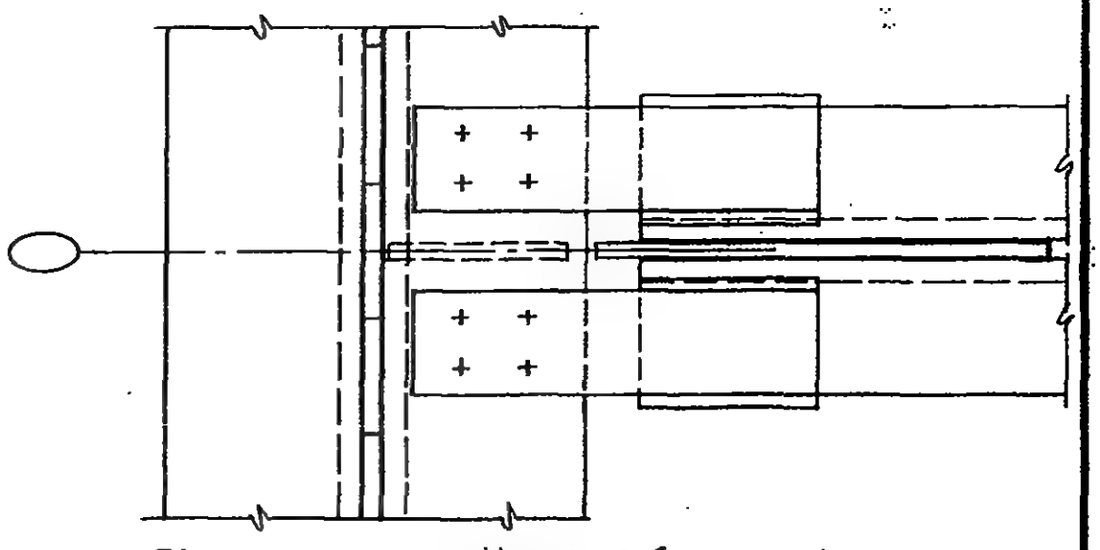

Plan same as section B-B (7-B8-8.10) except as shown

LICENSED PROFESSIONAL ENGINEER — LESLIE E. ROBERTSON — No. 34360 — UNIVERSITY OF THE STATE OF NEW YORK

DESIGNED: K. Hwang
DRAWN: J. Gricius
REVIEWED: W. Brewer

7-B8-8.3

SKILLING, HELLE, CHRISTIANSEN, ROBERTSON — Structural & Civil Engineers

PROJECT: THE WORLD TRADE CENTER | TITLE: FLOOR TRUSS DETAIL 8.4 | DATE: 3-19-69

REVISIONS

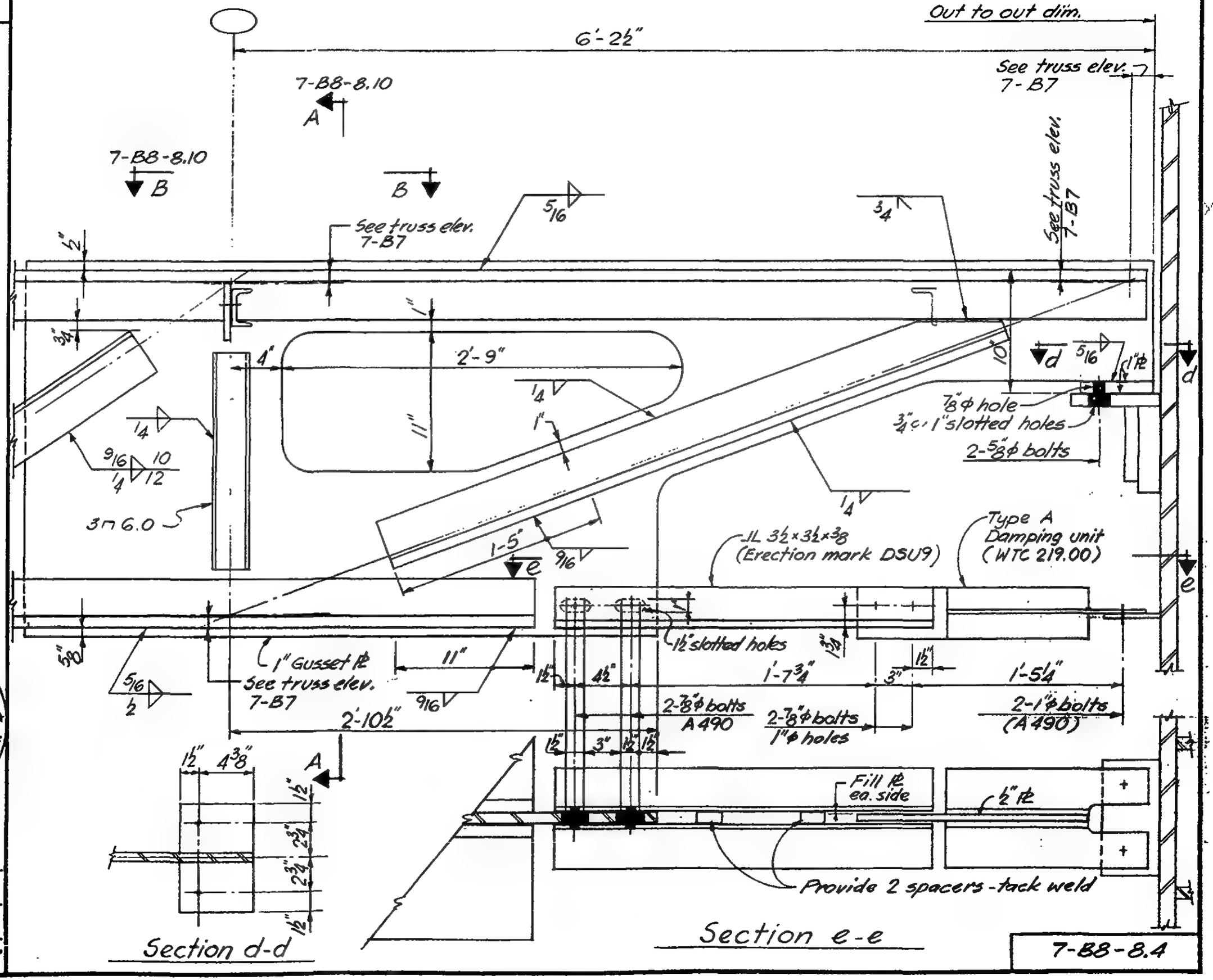

LICENSED PROFESSIONAL ENGINEER
LESLIE E. ROBERTSON
No. 34360
UNIVERSITY OF THE STATE OF NEW YORK

DESIGNED K. Hwang
DRAWN J. Gricius
REVIEWED W. Brewer

7-B8-8.4

SKILLING, HELLE, CHRISTIANSEN, ROBERTSON — Structural & Civil Engineers

PROJECT: THE WORLD TRADE CENTER

TITLE: FLOOR TRUSS DETAIL 8.5

DATE: 3-19-69

REVISIONS

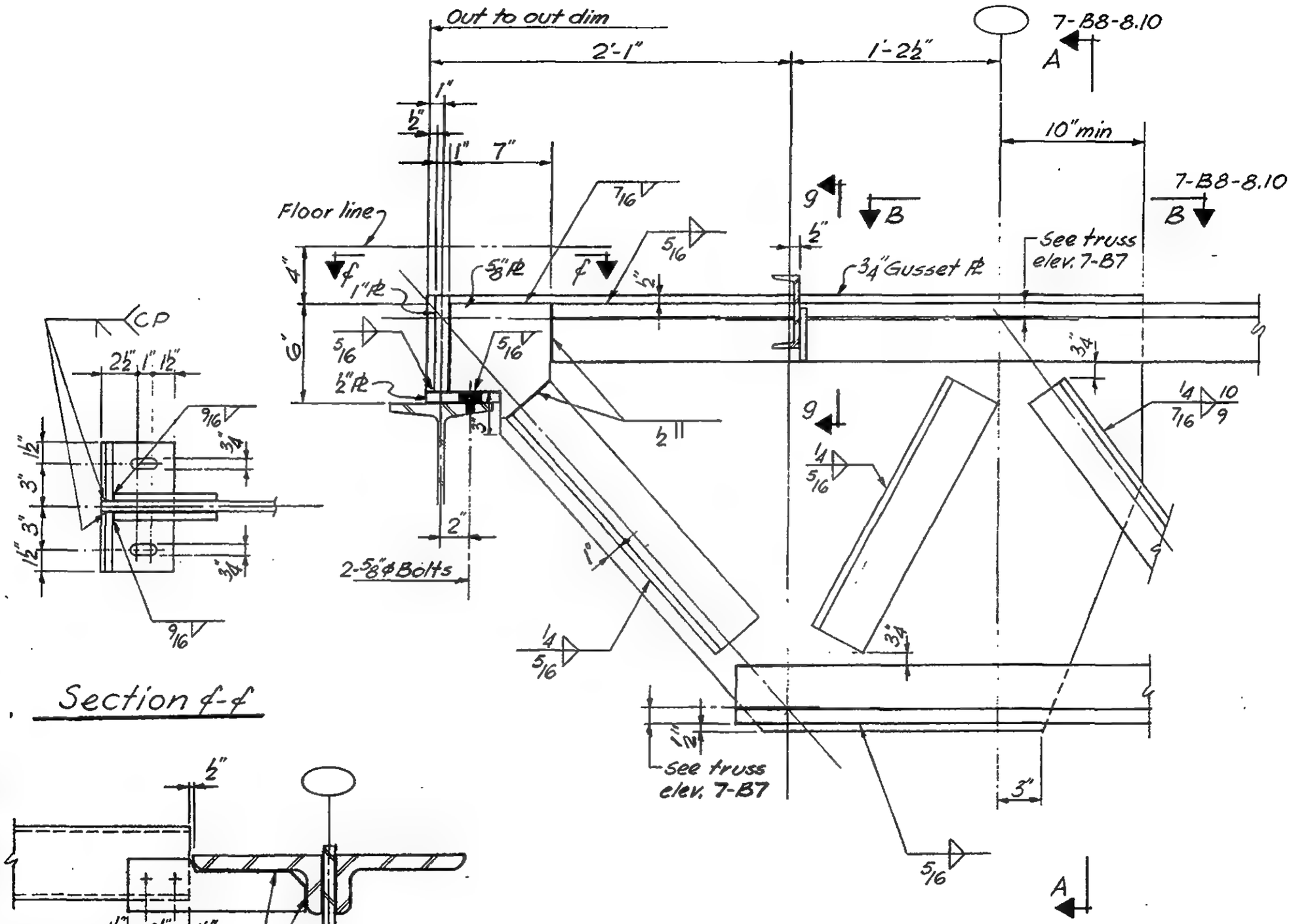

Section f-f

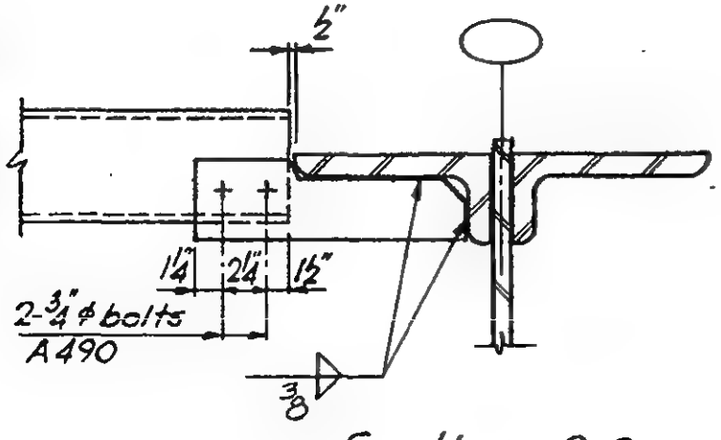

Section 9-9

LICENSED PROFESSIONAL ENGINEER — LESLIE E. ROBERTSON — No. 34960 — UNIVERSITY OF THE STATE OF NEW YORK

DESIGNED: K. Hwang

DRAWN: J. Gricius

REVIEWED: W. Brewer

7-B8-8.5

SKILLING, HELLE, CHRISTIANSEN, ROBERTSON — Structural & Civil Engineers

PROJECT: THE WORLD TRADE CENTER | TITLE: FLOOR TRUSS DETAIL 8.6 | DATE: 3-19-69

REVISIONS

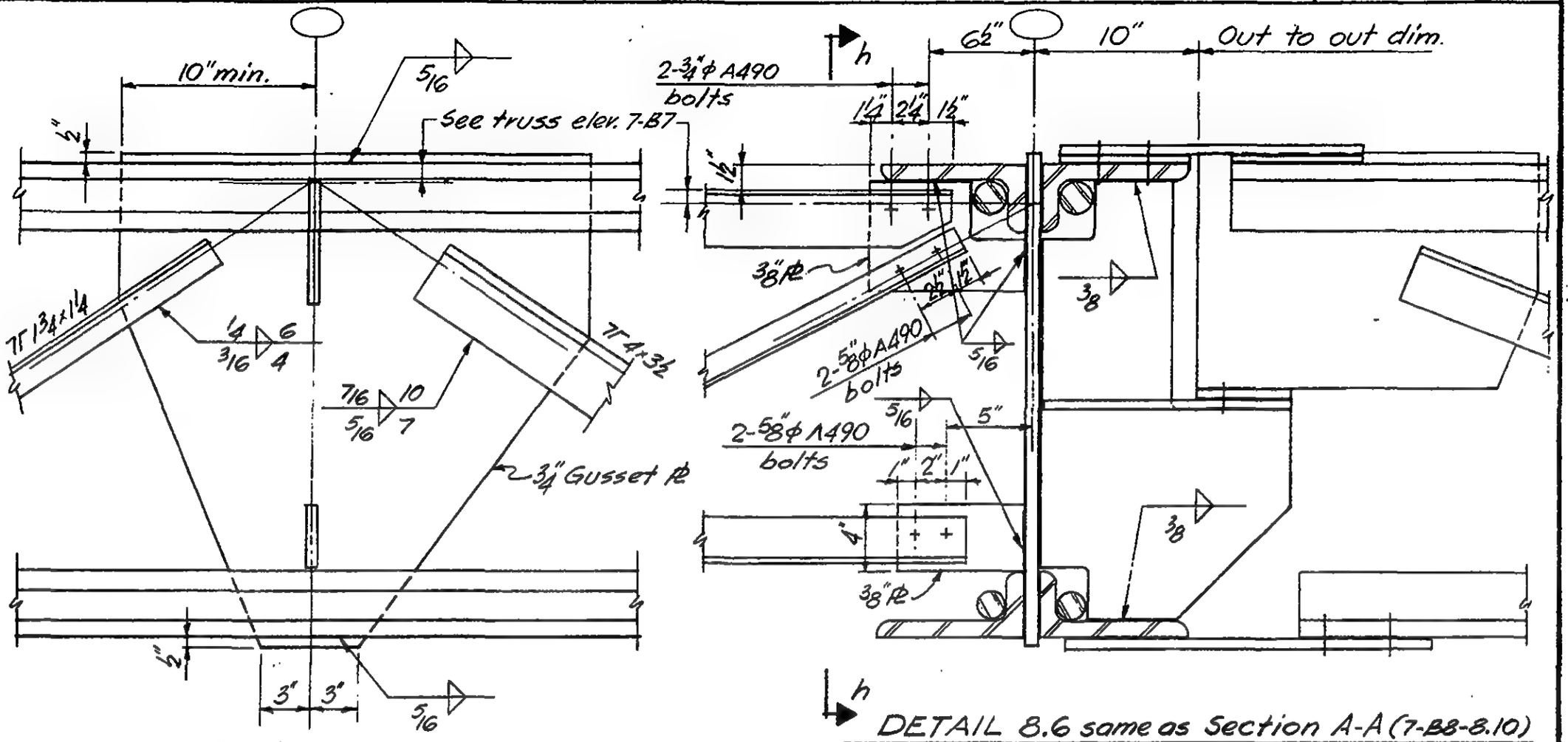

Section h-h

DETAIL 8.6 same as Section A-A (7-B8-8.10) except as shown

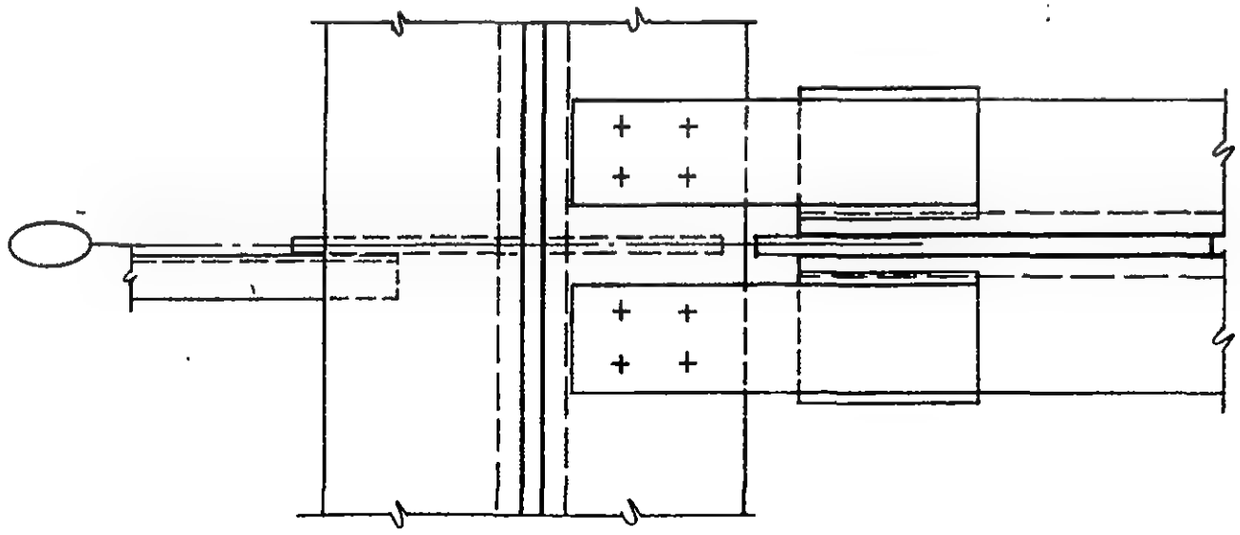

Plan same as section B-B (7-B8-8.10) except as shown

LICENSED PROFESSIONAL ENGINEER — LESLIE E. ROBERTSON — No. 34360 — UNIVERSITY OF THE STATE OF NEW YORK

DESIGNED K. Hwang
DRAWN J. Gricius
REVIEWED W. Brewer

7-B8-8.6

SKILLING, HELLE, CHRISTIANSEN, ROBERTSON — Structural & Civil Engineers

PROJECT: THE WORLD TRADE CENTER | TITLE: FLOOR TRUSS DETAIL 8.7 | DATE: 3-19-69

REVISIONS

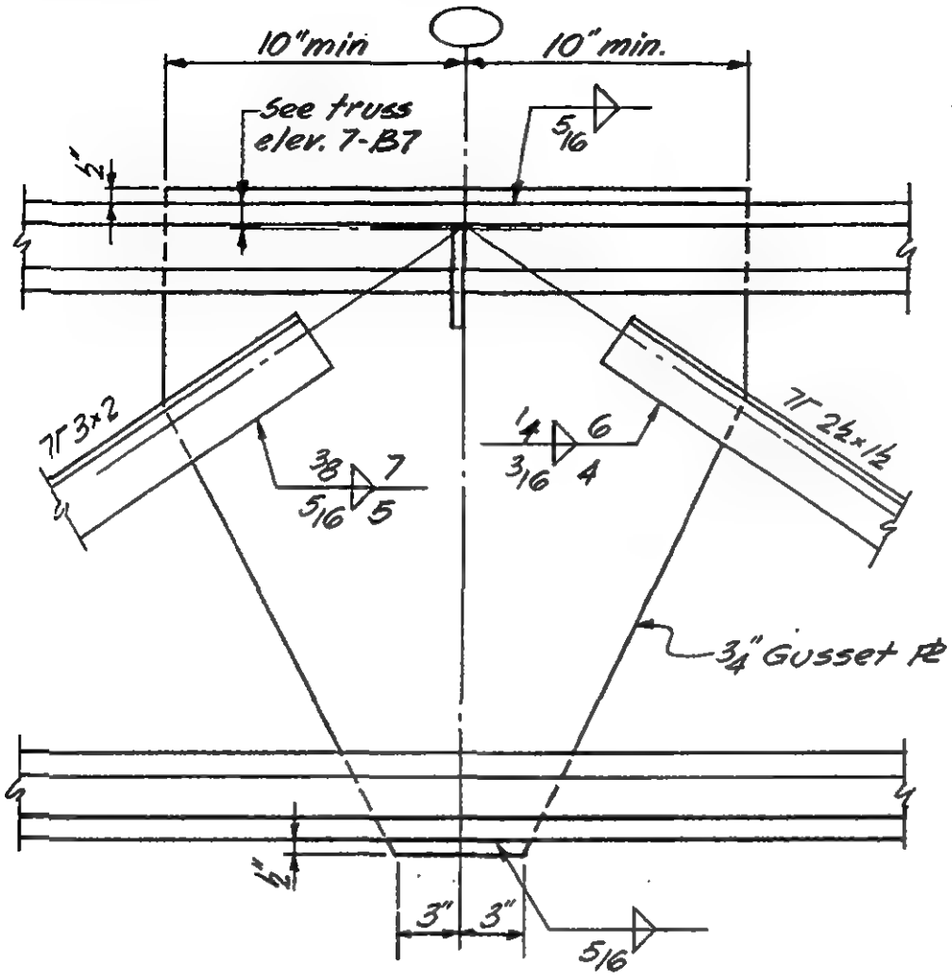

Section j-j

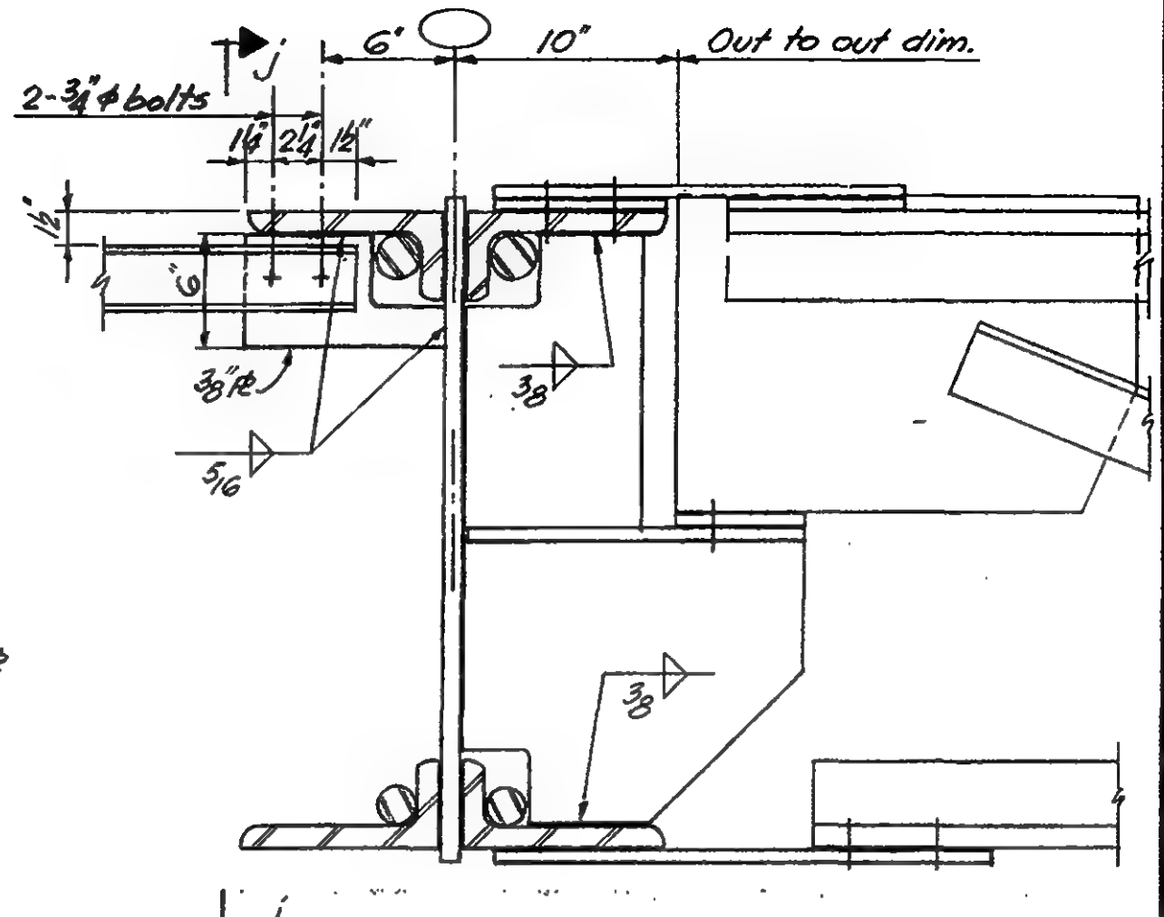

DETAIL 8.7 same as Section A-A (7-B8-8.10) except as shown

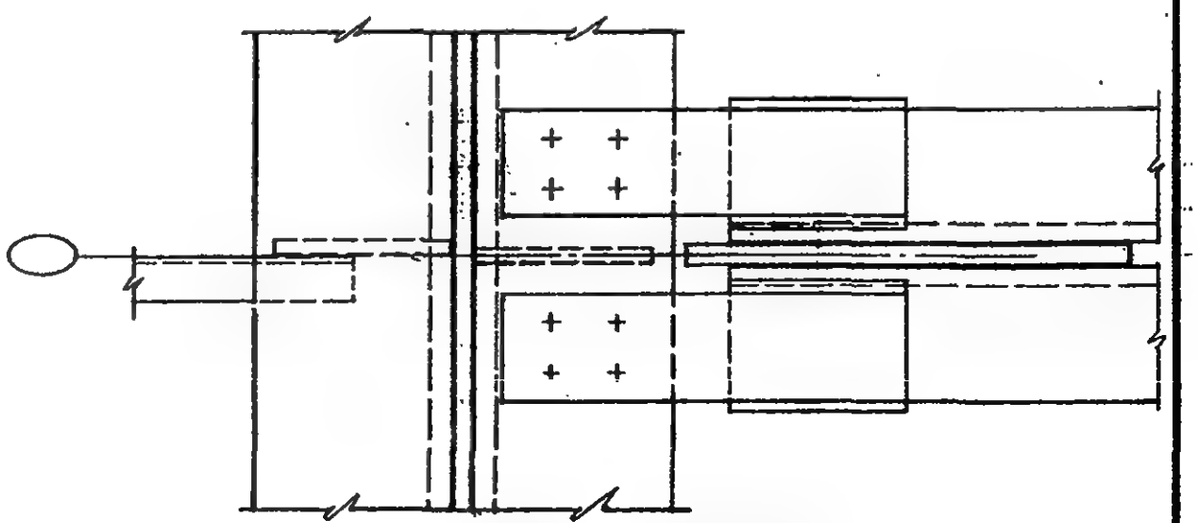

Plan same as section B-B (7-B8-8.10) except as shown

LICENSED PROFESSIONAL ENGINEER — LESLIE E ROBERTSON — No. 34360 — UNIVERSITY OF THE STATE OF NEW YORK

DESIGNED K. Hwang
DRAWN J. Gricius
REVIEWED W. Brewer

7-B8-8.7

SKILLING, HELLE, CHRISTIANSEN, ROBERTSON — Structural & Civil Engineers

PROJECT: THE WORLD TRADE CENTER | TITLE: FLOOR TRUSS DETAIL 8.8 | DATE: 3-19-69

REVISIONS

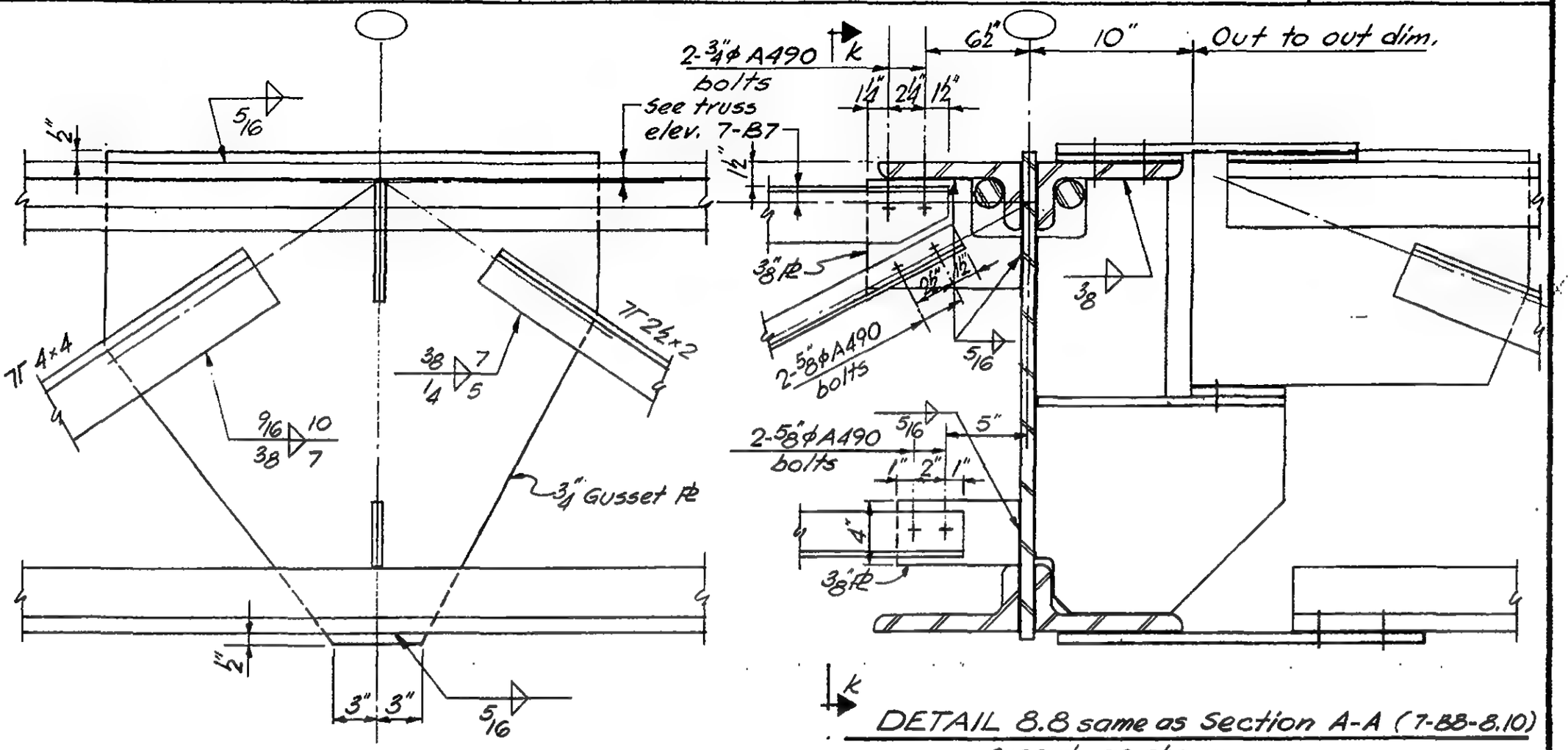

Section k-k

DETAIL 8.8 same as Section A-A (7-B8-8.10) except as shown

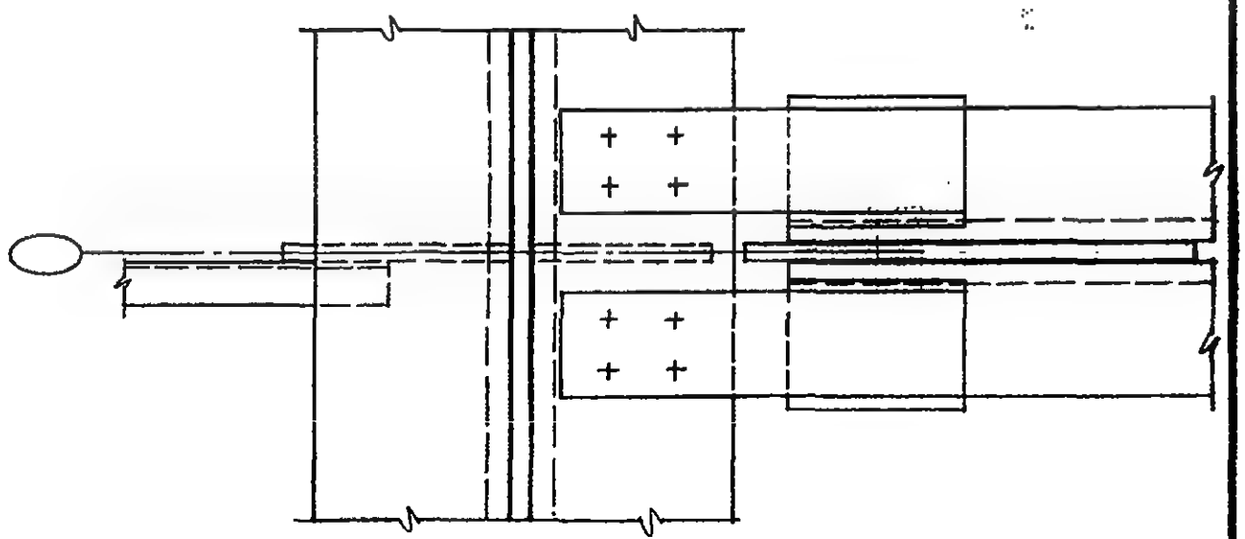

Plan same as section B-B (7-B8-8.10) except as shown

LICENSED PROFESSIONAL ENGINEER — LESLIE E. ROBERTSON — No. 34360 — UNIVERSITY OF THE STATE OF NEW YORK

DESIGNED K. Howang
DRAWN J. Gricius
REVIEWED W. Brewer

7-B8-8.8

SKILLING, HELLE, CHRISTIANSEN, ROBERTSON — Structural & Civil Engineers

PROJECT: THE WORLD TRADE CENTER | TITLE: FLOOR TRUSS DETAIL 8.9 | DATE: 3-19-69

REVISIONS

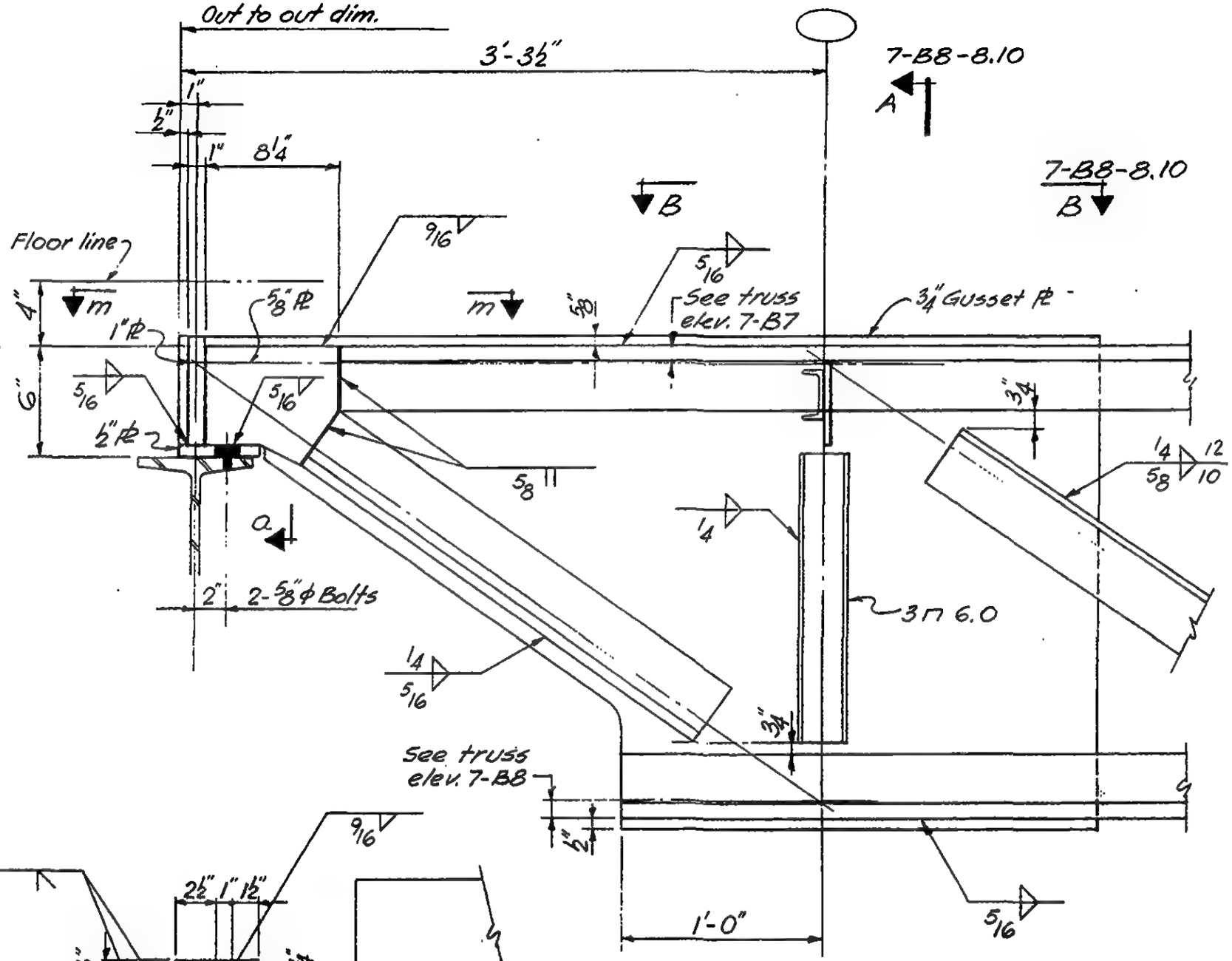

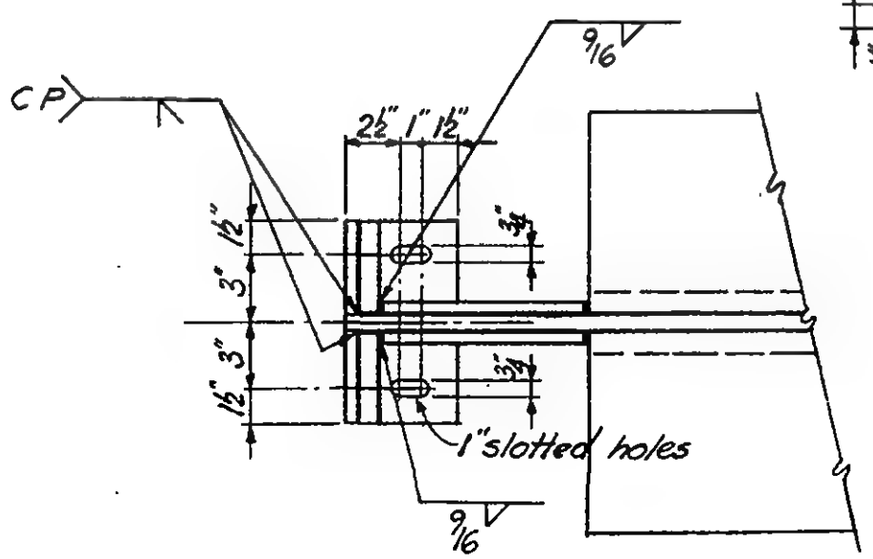

Section m-m

LICENSED PROFESSIONAL ENGINEER — LESLIE E. ROBERTSON — No. 34360 — UNIVERSITY OF THE STATE OF NEW YORK

DESIGNED K. Hwang

DRAWN J. Gricius

REVIEWED W. Brewer

7-B8-8.9

SKILLING, HELLE, CHRISTIANSEN, ROBERTSON — Structural & Civil Engineers

PROJECT: THE WORLD TRADE CENTER | TITLE: FLOOR TRUSS DETAILS - SECTION A-A, B-B | DATE: 3-19-69

REVISIONS

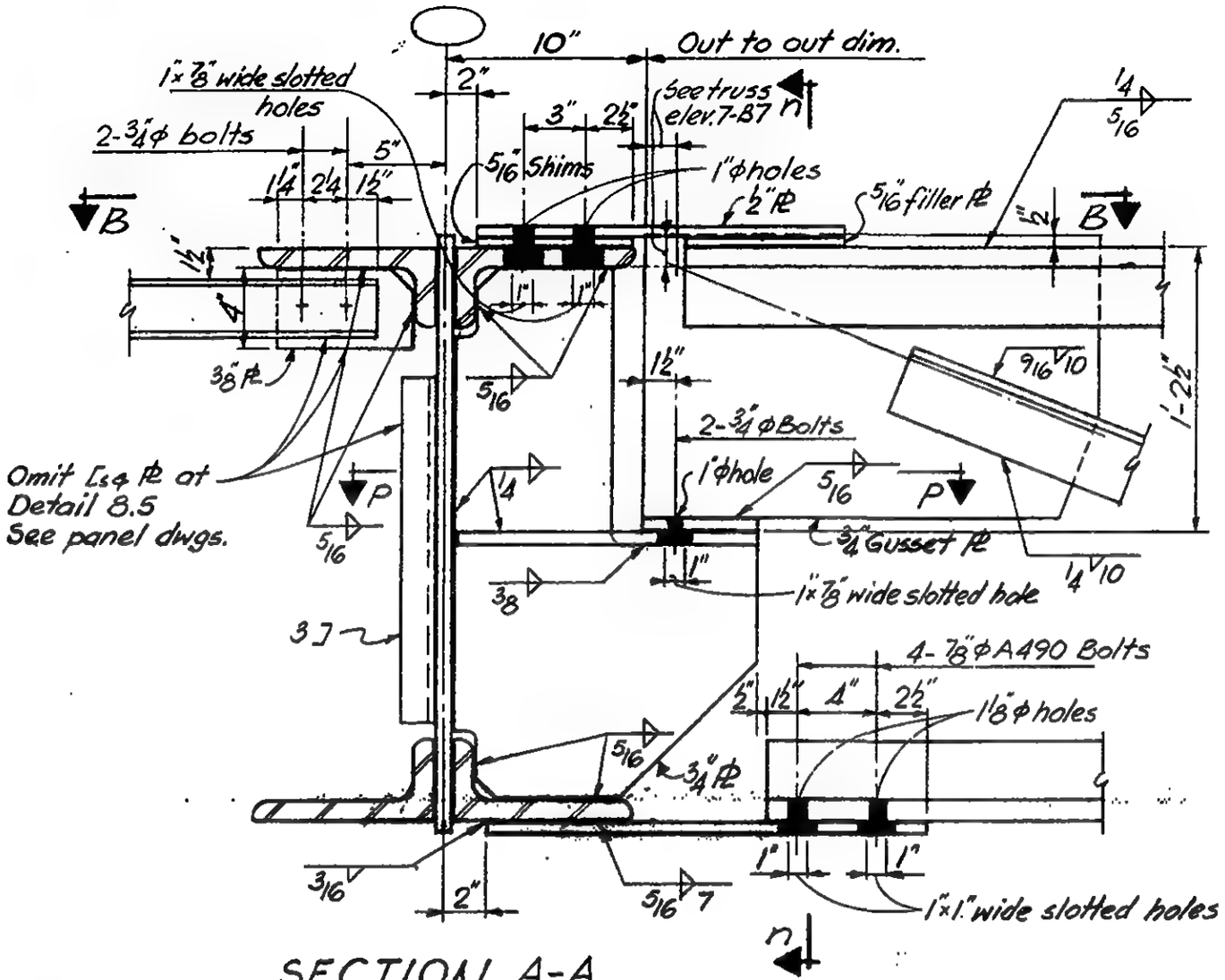

SECTION A-A

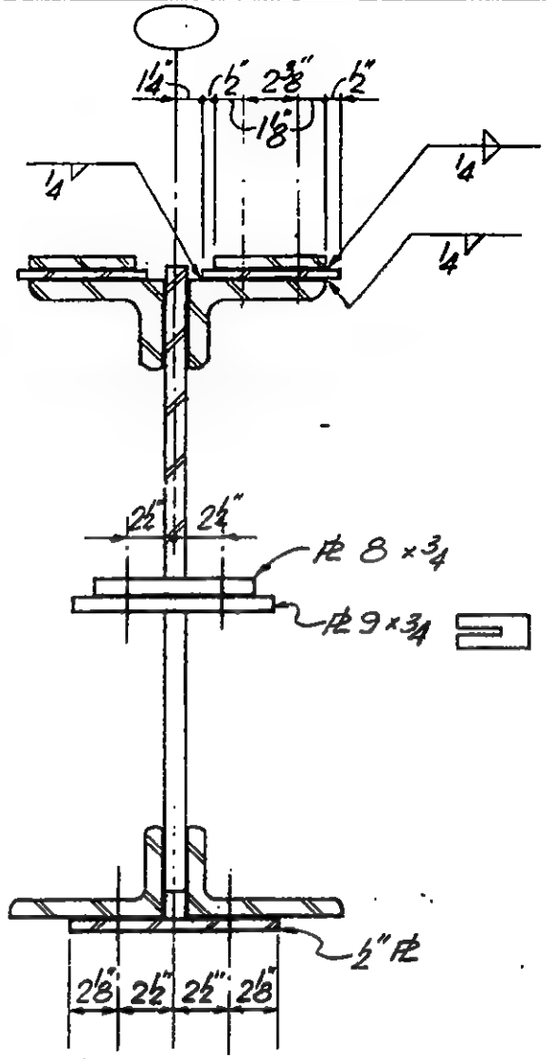

Section n-n

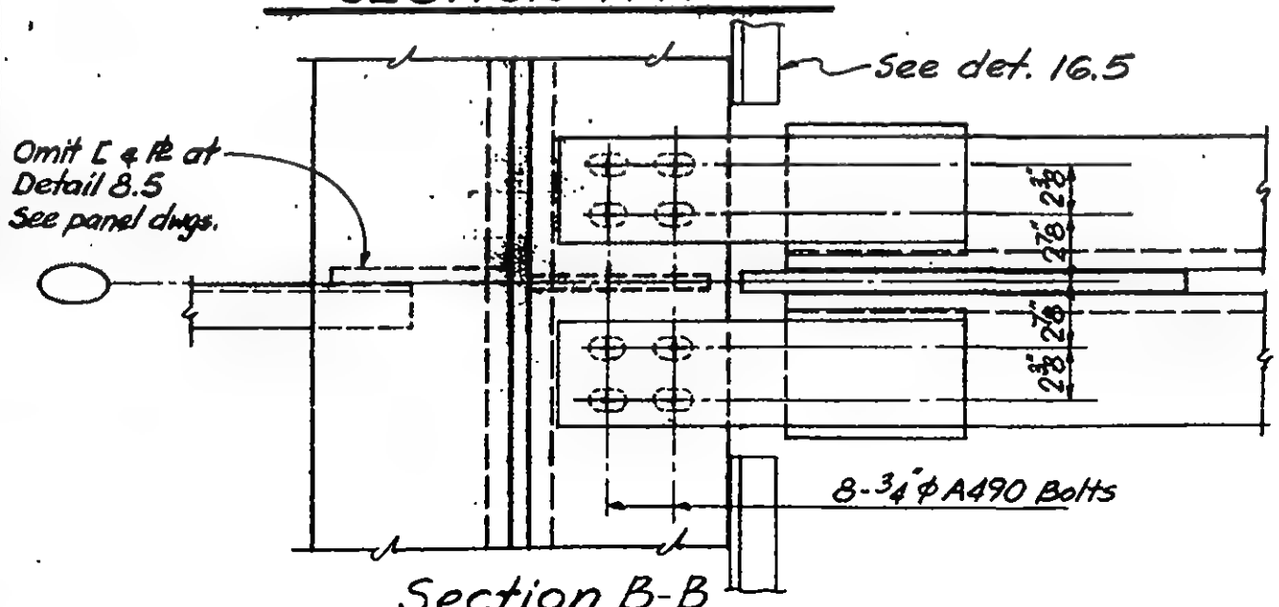

Section B-B

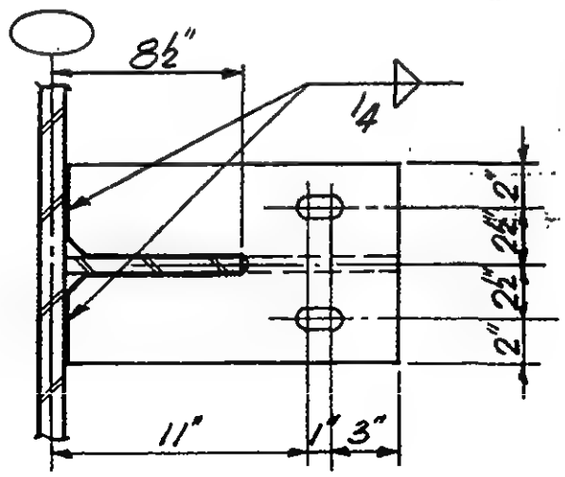

Section p-p

LICENSED PROFESSIONAL ENGINEER — LESLIE E. ROBERTSON — No. 34360 — UNIVERSITY OF THE STATE OF NEW YORK

DESIGNED K. Hwang
DRAWN J. Gricius
REVIEWED W. Brewer

7-B8-8.10

SKILLING, HELLE, CHRISTIANSEN, ROBERTSON — Structural & Civil Engineers

PROJECT	TITLE	DATE
THE WORLD TRADE CENTER	FLOOR TRUSS DETAIL 8.10	3-19-69

REVISIONS

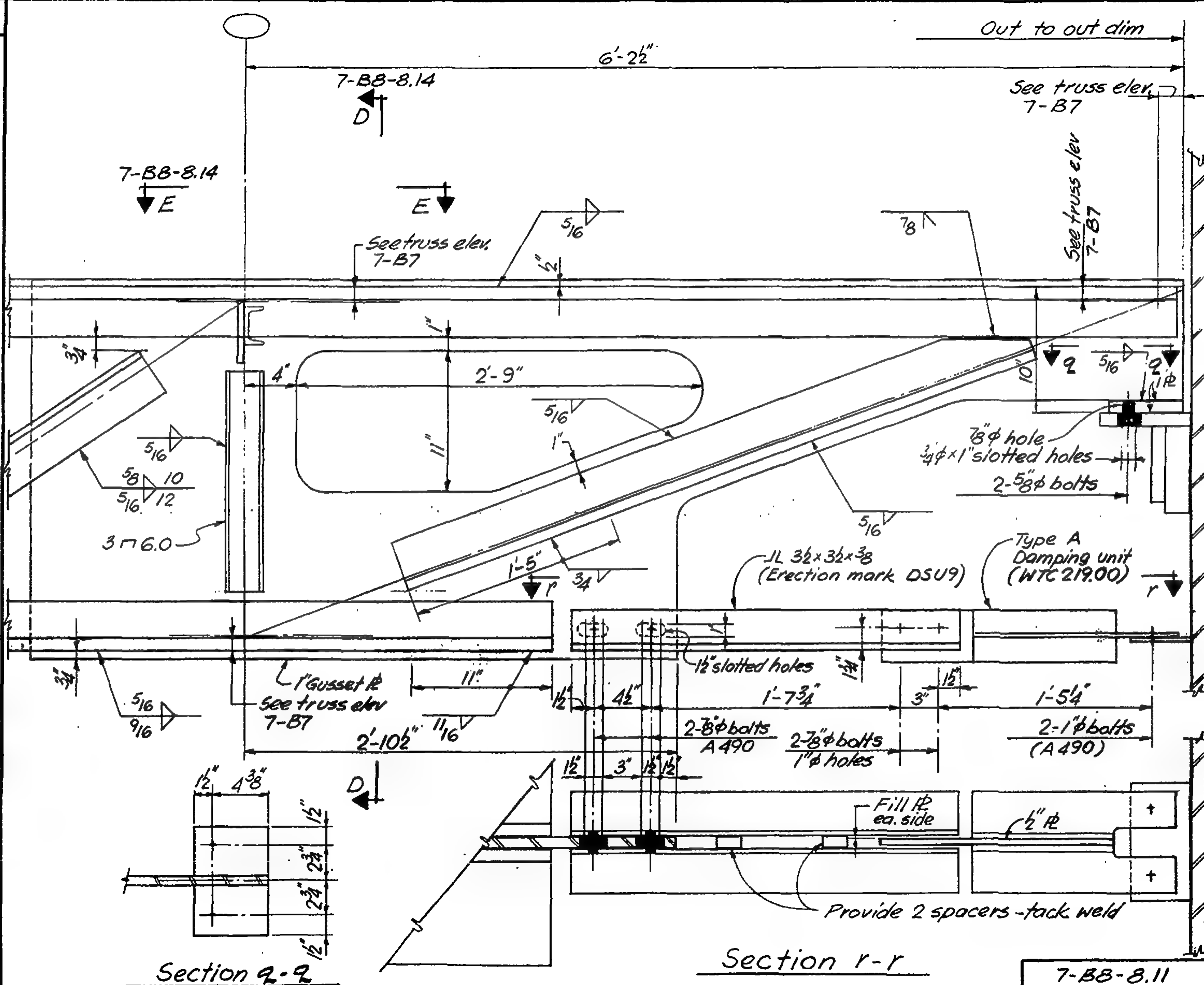

LICENSED PROFESSIONAL ENGINEER — LESLIE E. ROBERTSON — No. 34360 — UNIVERSITY OF THE STATE OF NEW YORK

DESIGNED: K. Hwang

DRAWN: J. Gricius

REVIEWED: W. Brewer

7-B8-8.11

SKILLING, HELLE, CHRISTIANSEN, ROBERTSON — Structural & Civil Engineers

PROJECT: THE WORLD TRADE CENTER | TITLE: FLOOR TRUSS DETAIL 8.11 & 8.12 | DATE: 3-19-69

REVISIONS

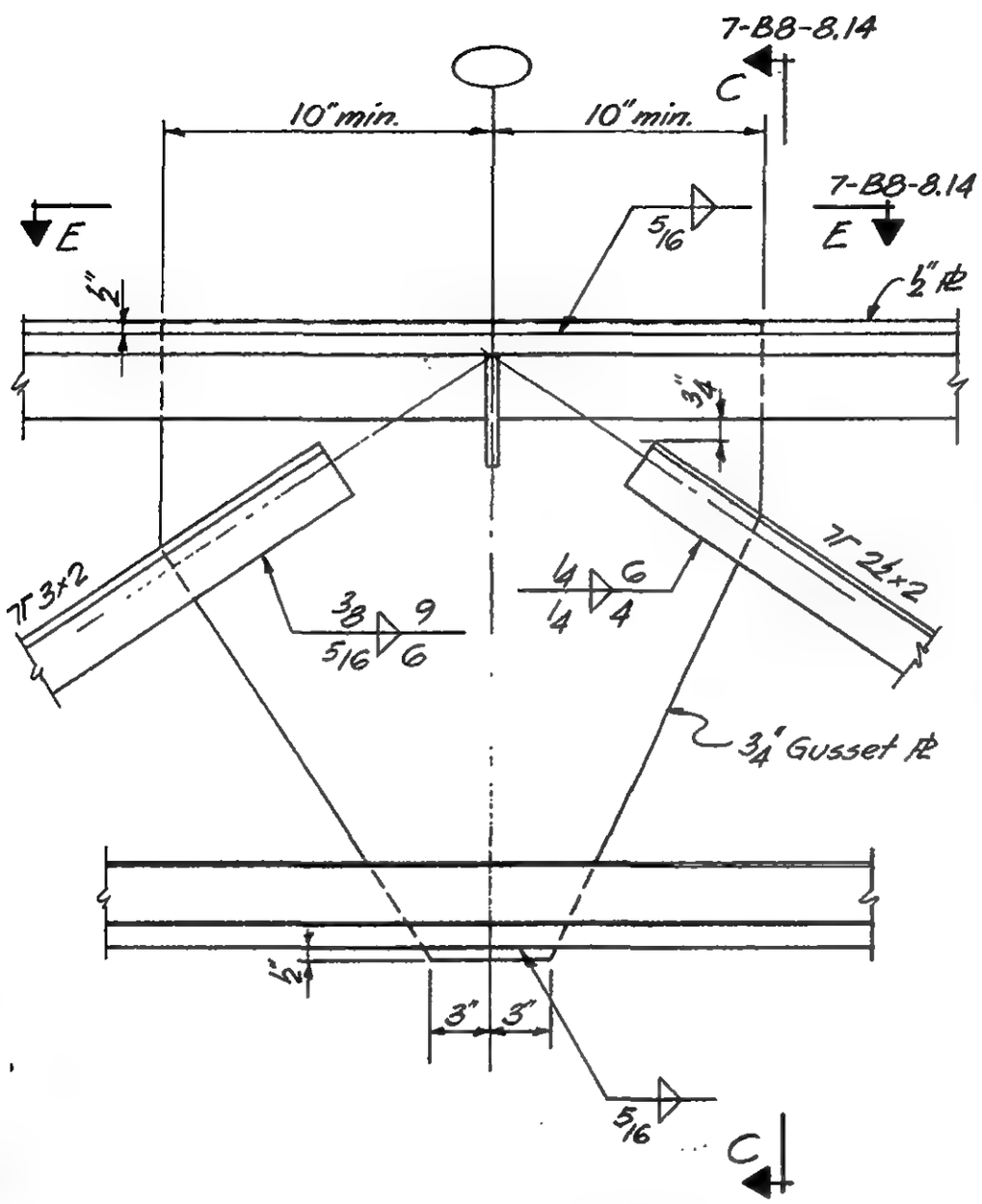

DETAIL 8.12

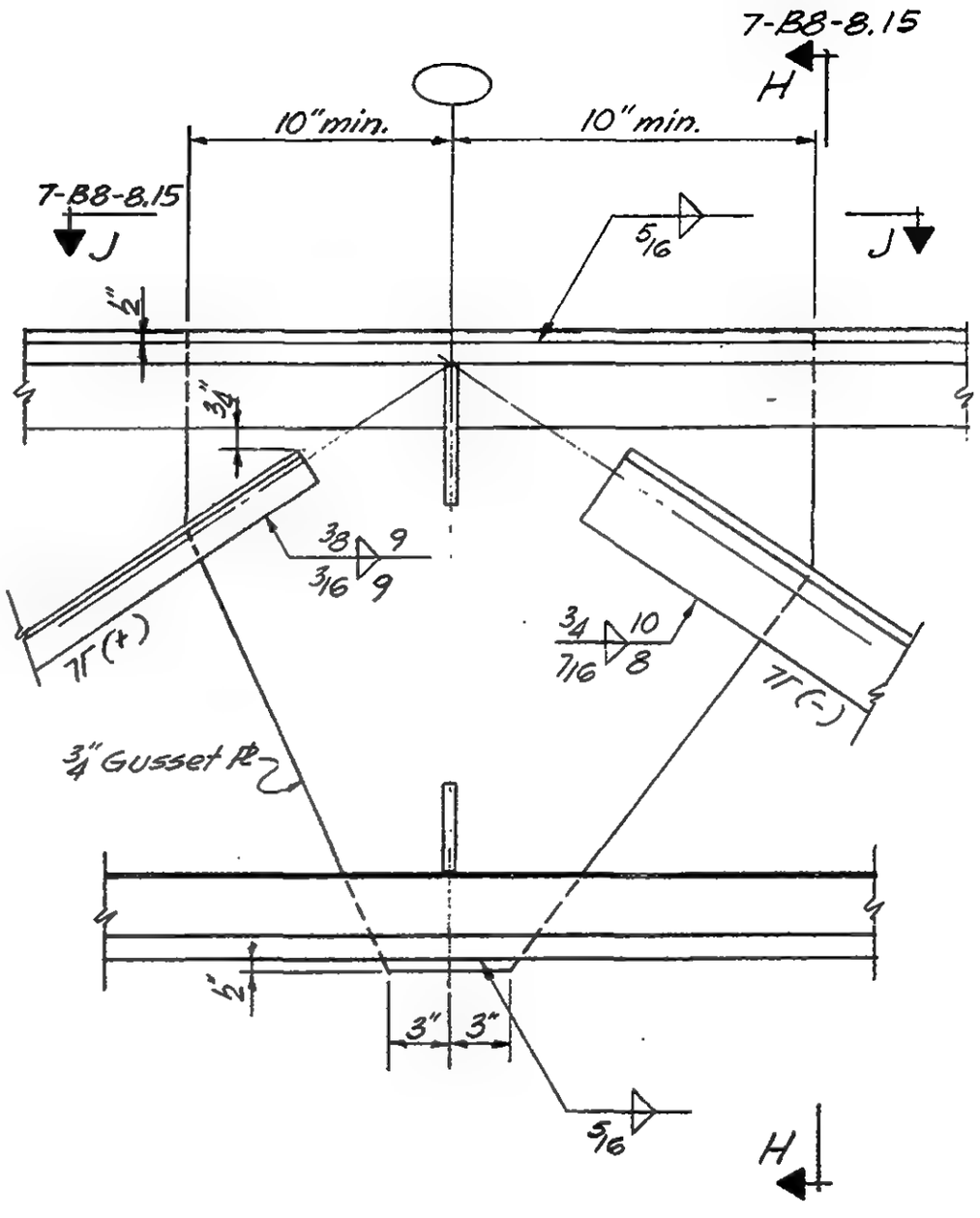

DETAIL 8.11

LICENSED PROFESSIONAL ENGINEER — LESLIE E. ROBERTSON — No. 34960 — UNIVERSITY OF THE STATE OF NEW YORK

DESIGNED K. Hwang

DRAWN J. Gricius

REVIEWED W. Brewer

7-B8-8.12

SKILLING, HELLE, CHRISTIANSEN, ROBERTSON — Structural & Civil Engineers

PROJECT: THE WORLD TRADE CENTER | TITLE: FLOOR TRUSS DETAIL 8.13 | DATE: 3-19-69

REVISIONS

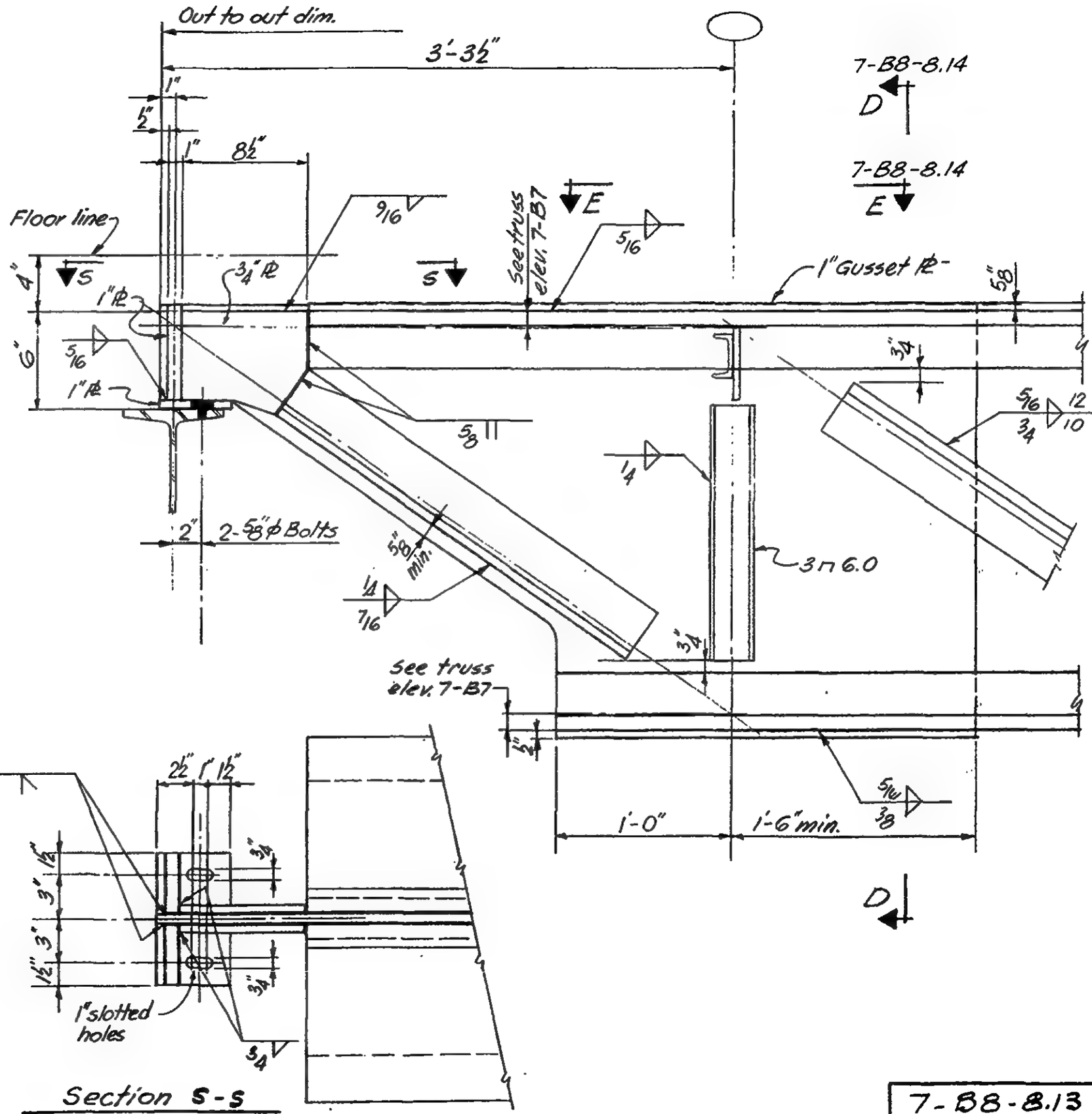

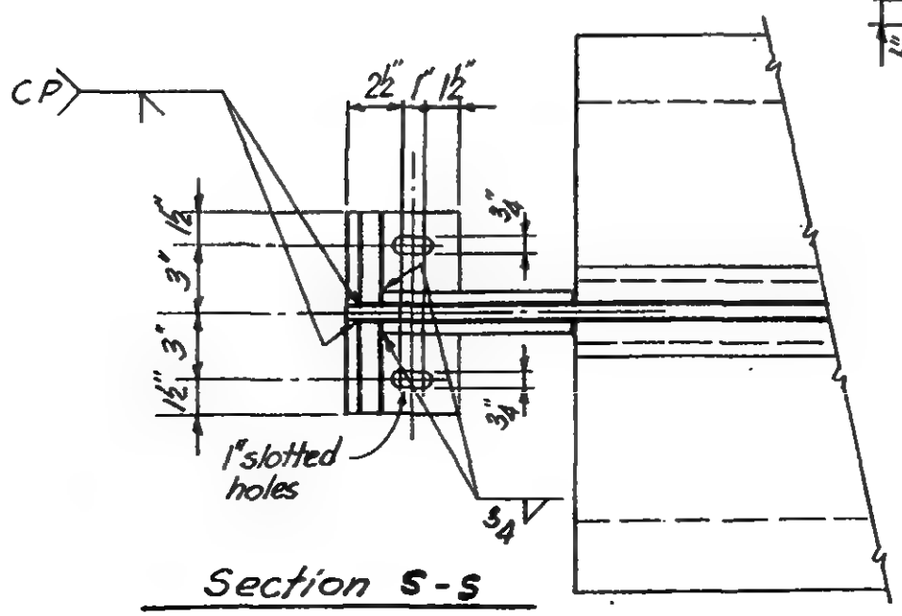

Section S-S

LICENSED PROFESSIONAL ENGINEER — LESLIE E. ROBERTSON — No. 34360 — UNIVERSITY OF THE STATE OF NEW YORK

DESIGNED K. Howang

DRAWN J. Gricius

REVIEWED W. Brewer

7-B8-8.13

SKILLING, HELLE, CHRISTIANSEN, ROBERTSON — Structural & Civil Engineers

PROJECT: THE WORLD TRADE CENTER

TITLE: FLOOR TRUSS DETAILS & SECTIONS C-C thru G-G

DATE: 3-19-69

REVISIONS

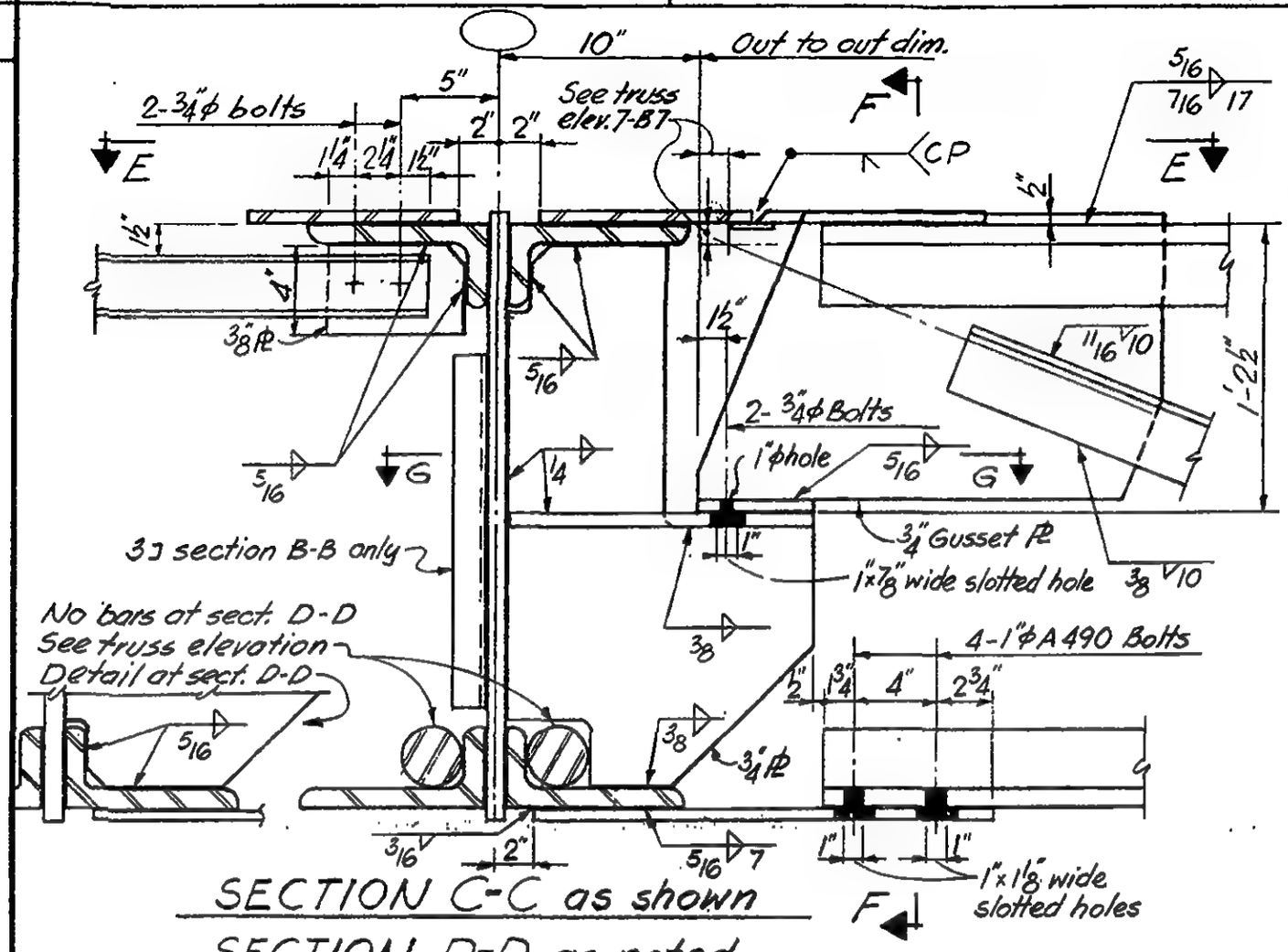

SECTION C-C as shown

SECTION D-D as noted

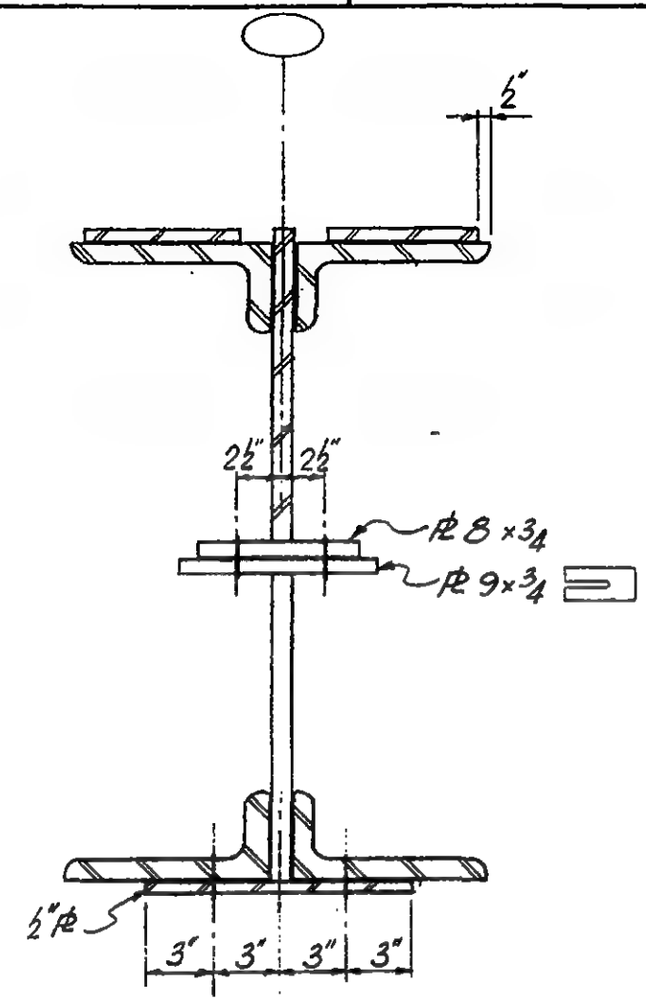

Section F-F

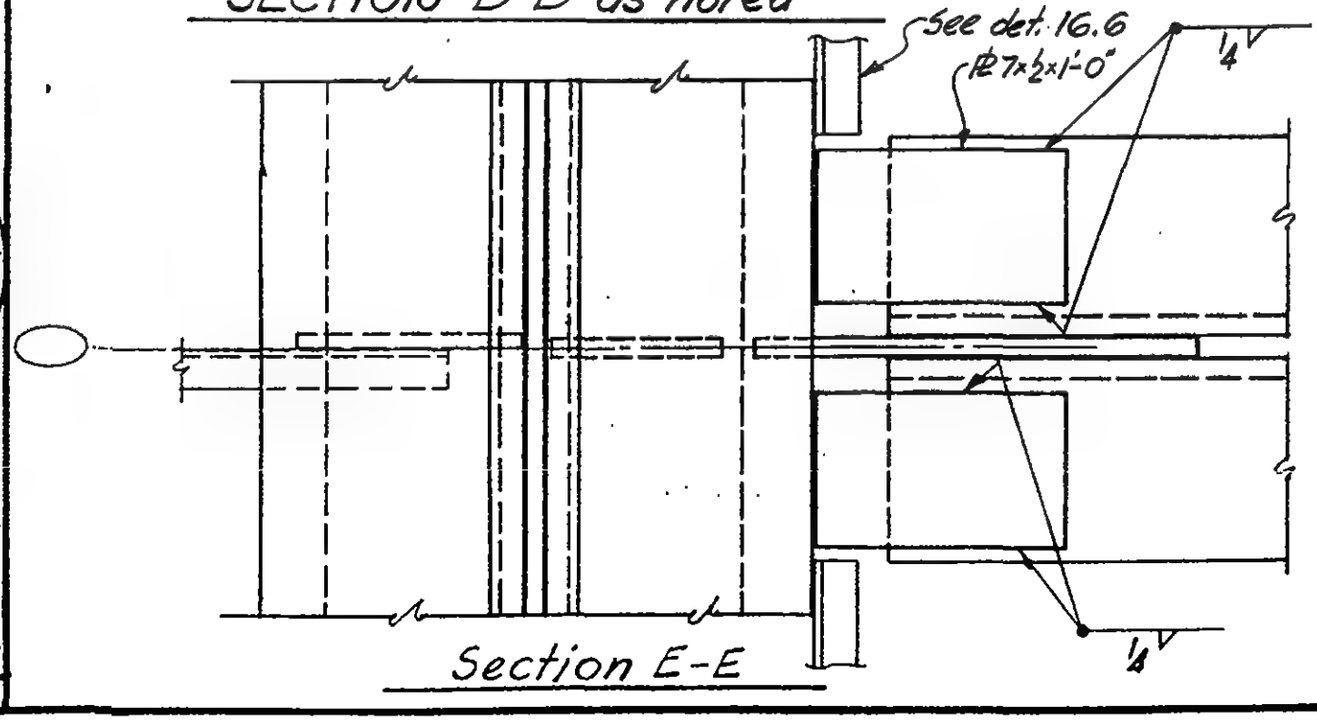

Section E-E

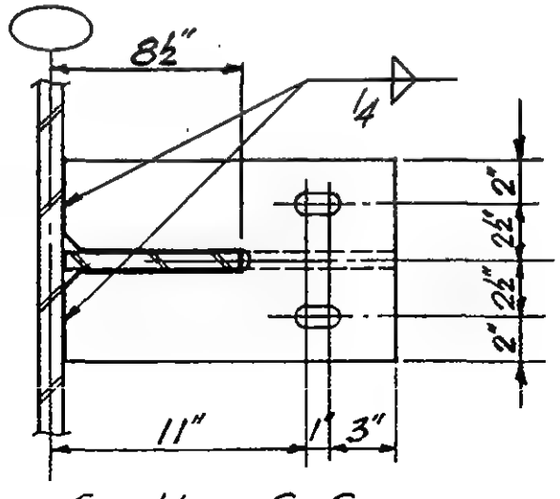

Section G-G

LICENSED PROFESSIONAL ENGINEER — LESLIE E. ROBERTSON — No. 34360 — UNIVERSITY OF THE STATE OF NEW YORK

DESIGNED K. Hwang

DRAWN J. Gricius

REVIEWED W. Brewer

7-B8-8.14

SKILLING, HELLE, CHRISTIANSEN, ROBERTSON — Structural & Civil Engineers

PROJECT: THE WORLD TRADE CENTER | TITLE: FLOOR TRUSS DETAIL & SECTIONS H-H, J-J | DATE: 3-19-69

REVISIONS

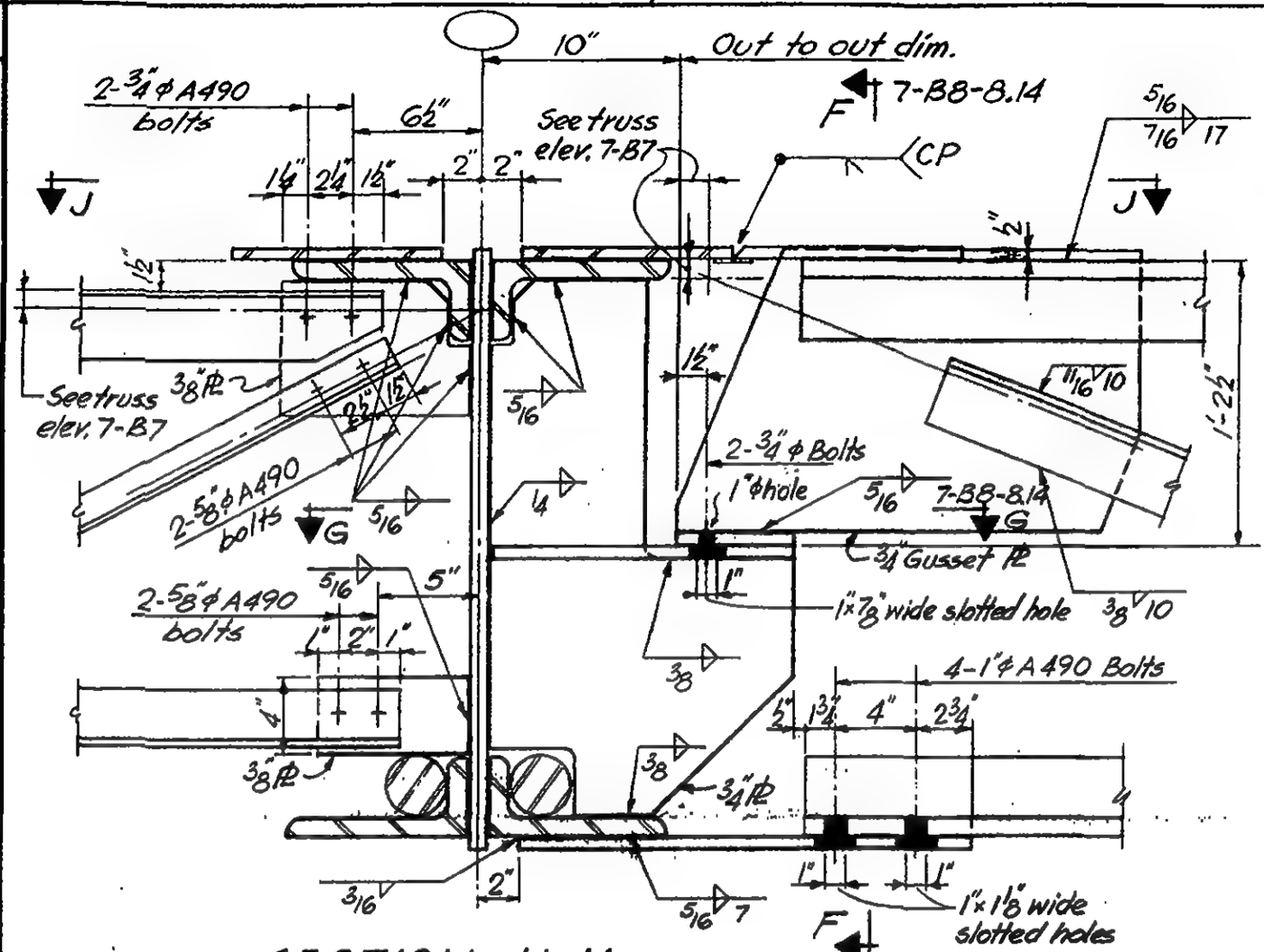

LICENSED PROFESSIONAL ENGINEER — LESLIE E. ROBERTSON — No. 34360 — UNIVERSITY OF THE STATE OF NEW YORK

DESIGNED K. Hwang

DRAWN J. Gricius

REVIEWED W. Brewer

7-B8-8.15

SKILLING, HELLE, CHRISTIANSEN, ROBERTSON — Structural & Civil Engineers

PROJECT: THE WORLD TRADE CENTER | TITLE: FLOOR TRUSS DETAIL 8.14 | DATE: 3-19-69

REVISIONS

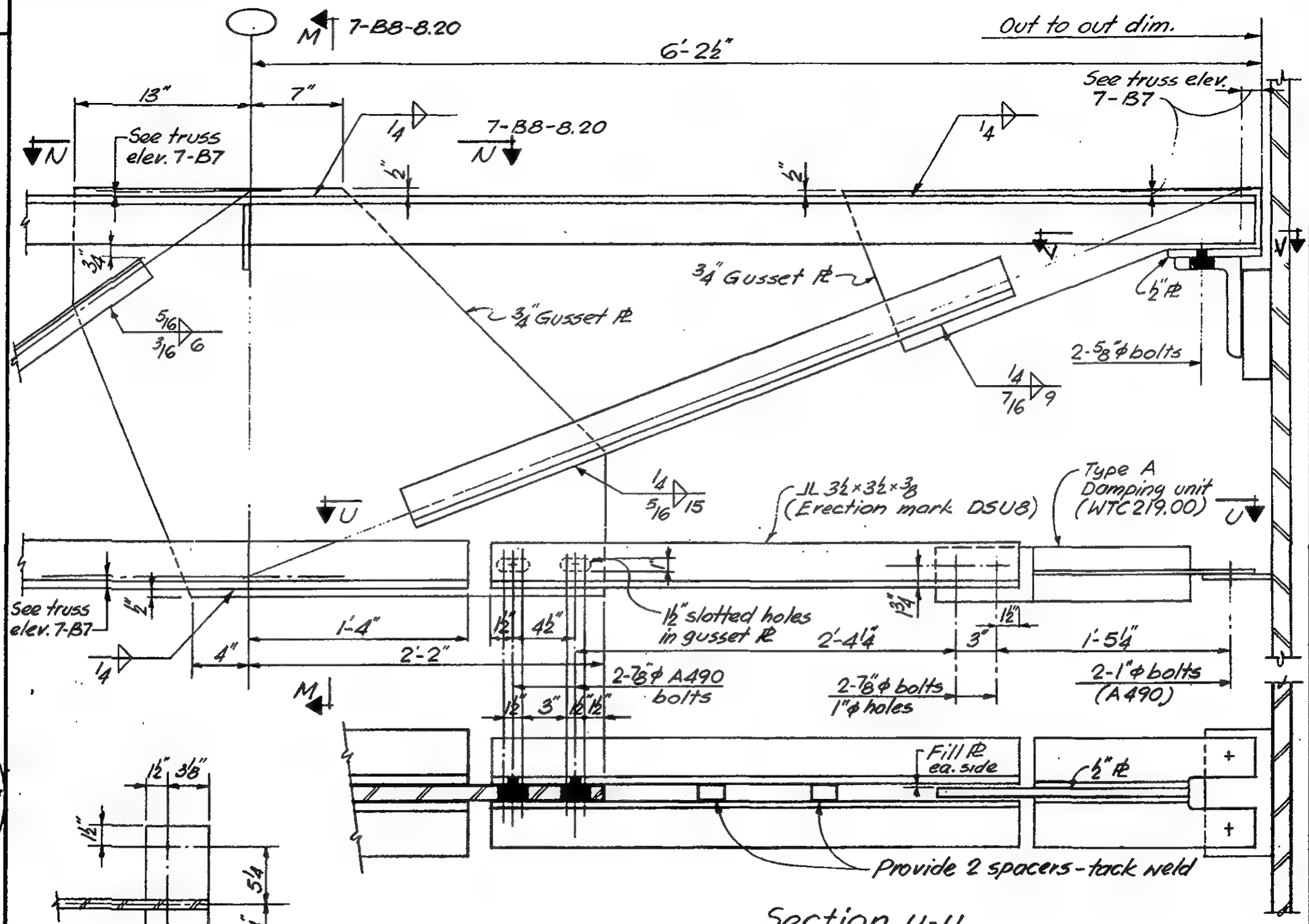

LICENSED PROFESSIONAL ENGINEER — LESLIE E. ROBERTSON — No. 34360 — UNIVERSITY OF THE STATE OF NEW YORK

DESIGNED K. Hwang

DRAWN J. Gricius

REVIEWED W. Brewer

7-B8-8.16

SKILLING, HELLE, CHRISTIANSEN, ROBERTSON — Structural & Civil Engineers

PROJECT: THE WORLD TRADE CENTER | TITLE: FLOOR TRUSS DETAIL 8.15 & 8.16 | DATE: 3-19-69

REVISIONS

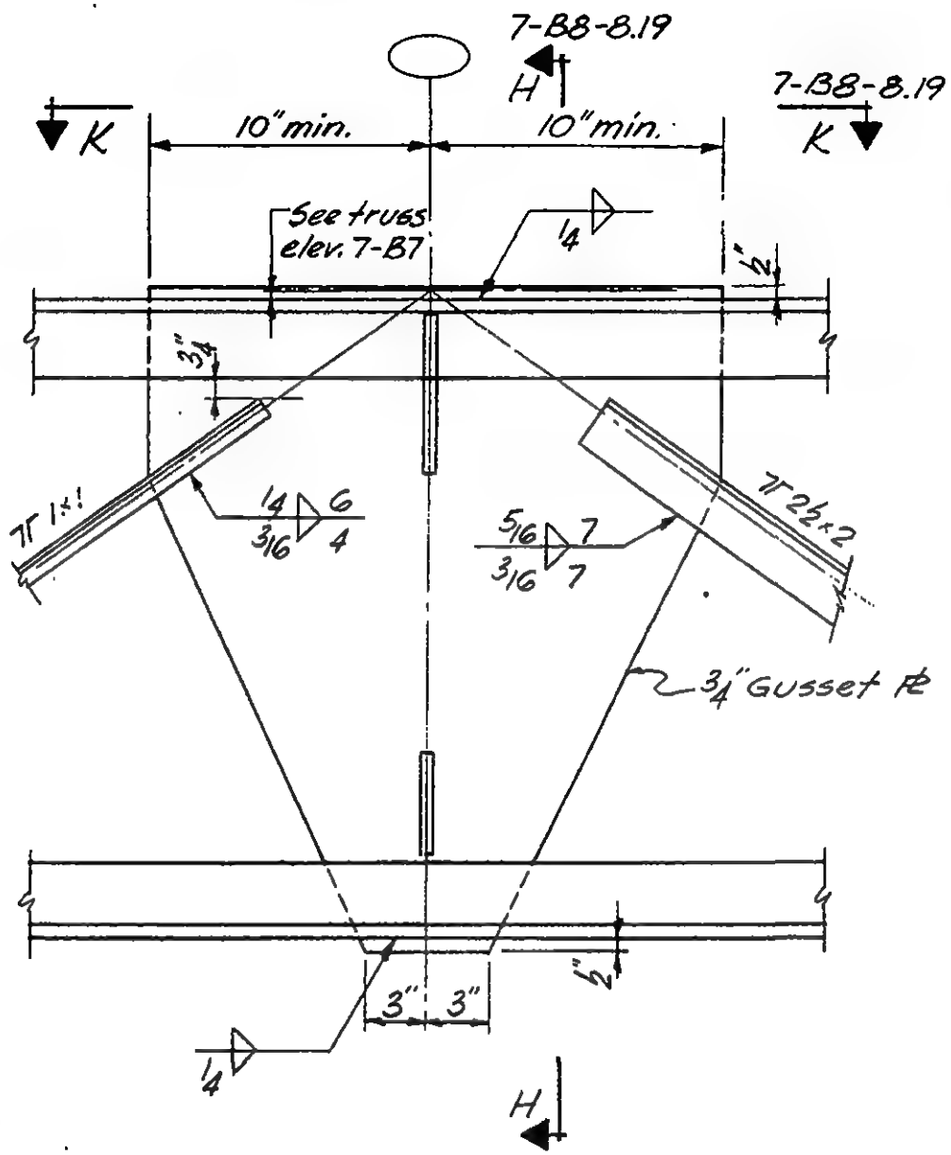

DETAIL 8.15

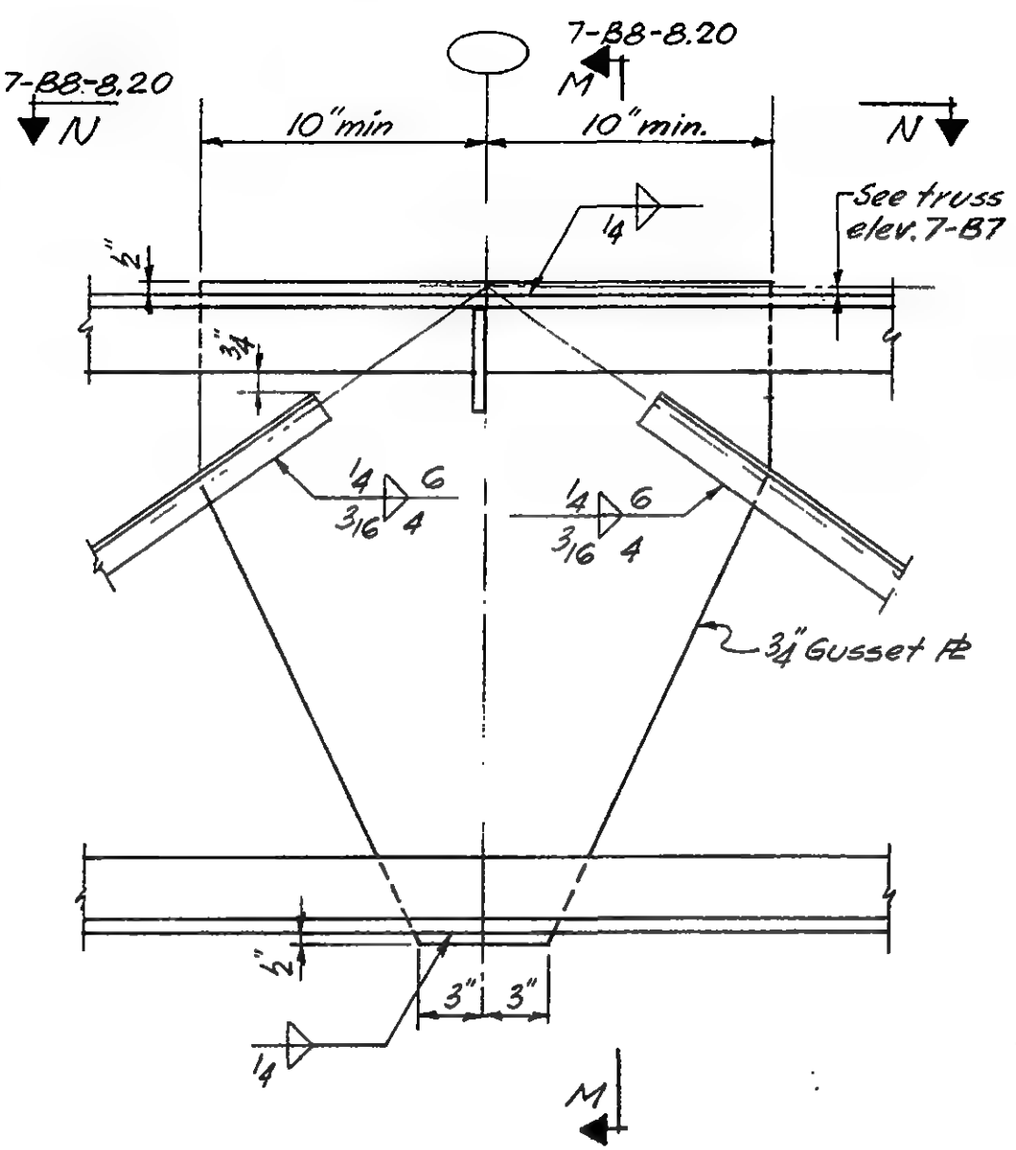

DETAIL 8.16

LICENSED PROFESSIONAL ENGINEER — LESLIE E. ROBERTSON — No. 34360 — UNIVERSITY OF THE STATE OF NEW YORK

DESIGNED K. Hwang

DRAWN J. Gricius

REVIEWED W. Brewer

7-B8-8.17

SKILLING, HELLE, CHRISTIANSEN, ROBERTSON — Structural & Civil Engineers

PROJECT: THE WORLD TRADE CENTER | TITLE: FLOOR TRUSS DETAIL 8.17 | DATE: 3-19-69

REVISIONS

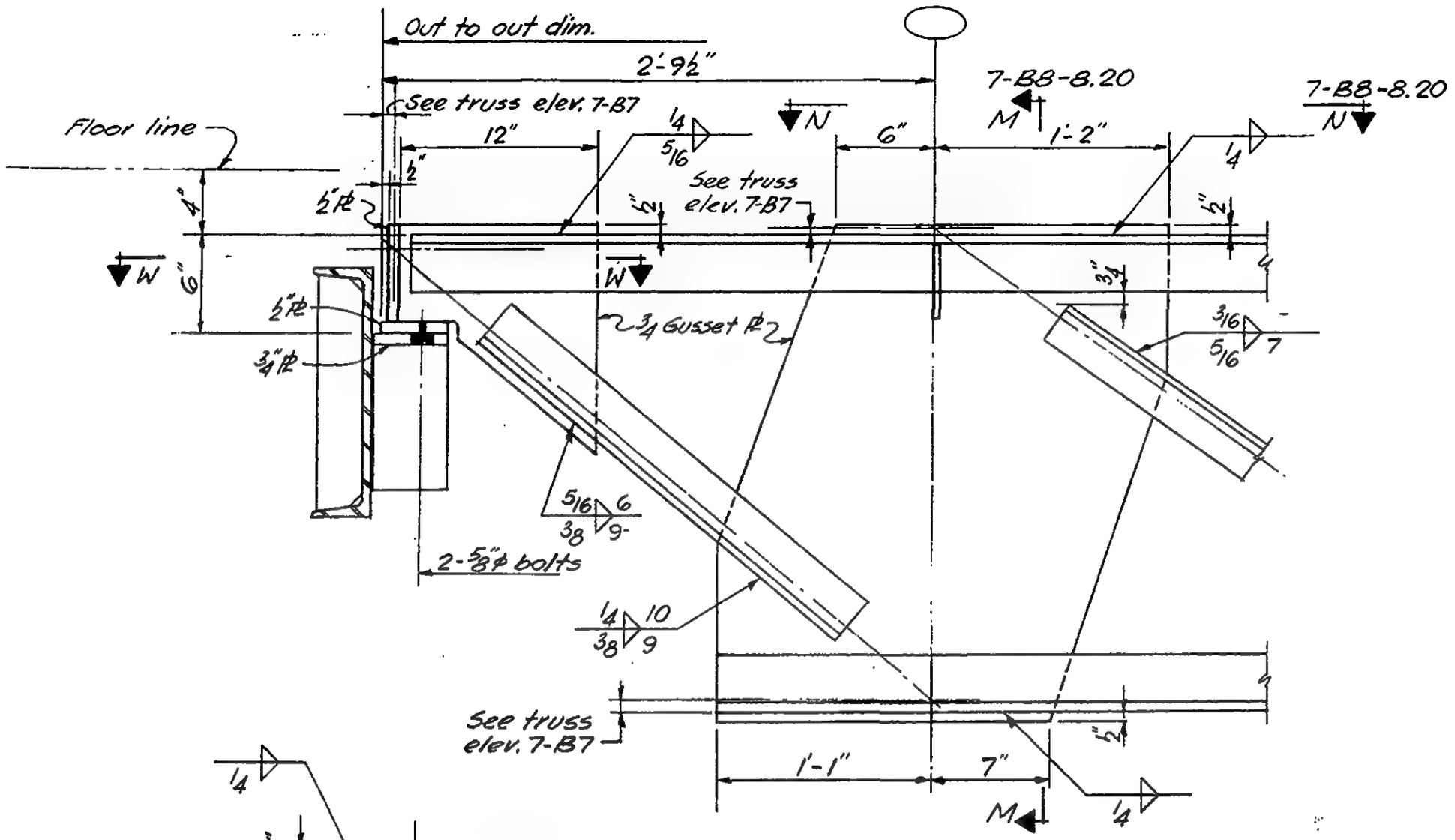

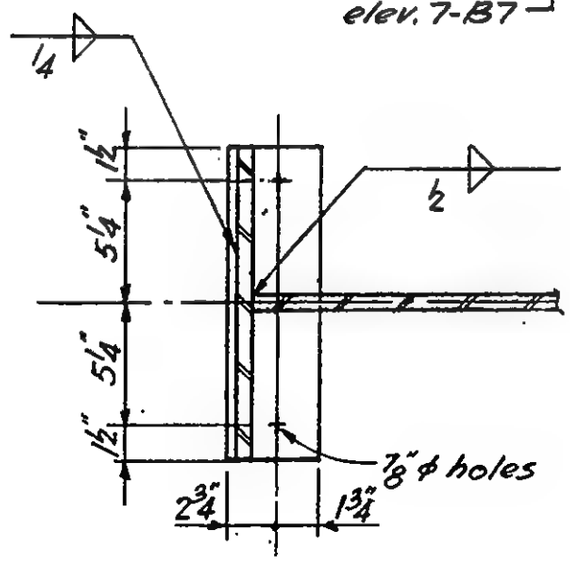

Section W-W

LICENSED PROFESSIONAL ENGINEER — LESLIE E. ROBERTSON — No. 34960 — UNIVERSITY OF THE STATE OF NEW YORK

DESIGNED K. Hwang

DRAWN J. Gricius

REVIEWED W. Brewer

7-B8-8.18

SKILLING, HELLE, CHRISTIANSEN, ROBERTSON — Structural & Civil Engineers

PROJECT: THE WORLD TRADE CENTER | TITLE: FLOOR TRUSS DETAILS SECTIONS H-H, L-L | DATE: 3-19-69

REVISIONS

7-14-69

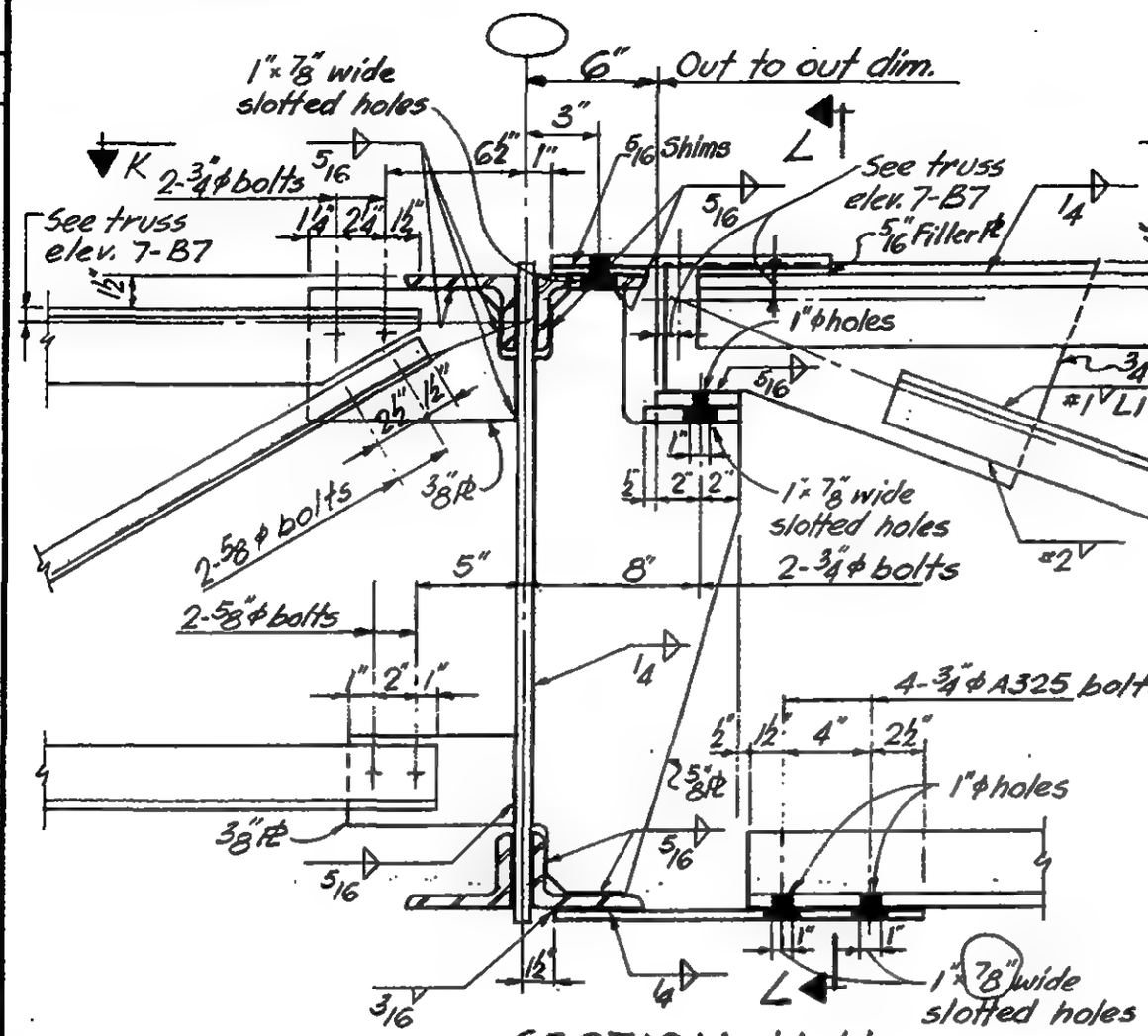

SECTION H-H

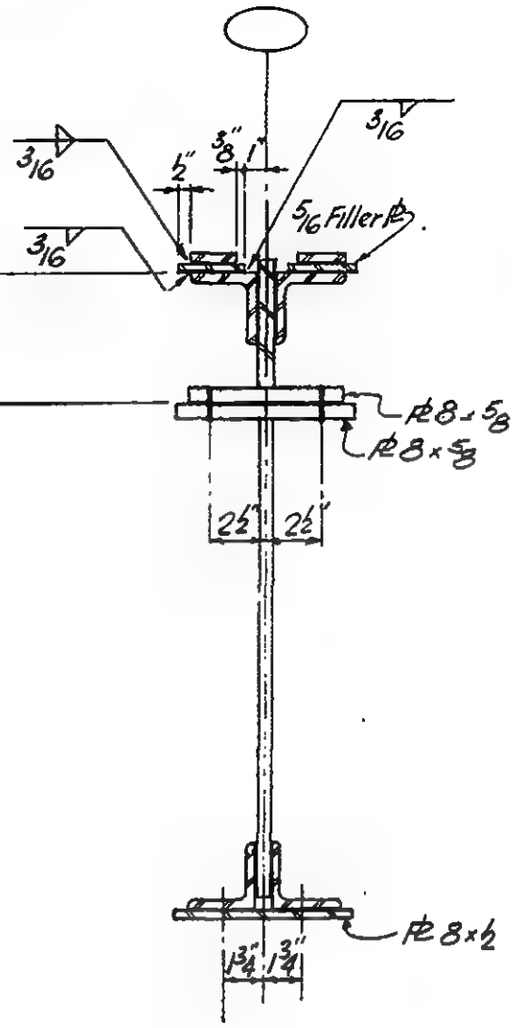

Section L-L

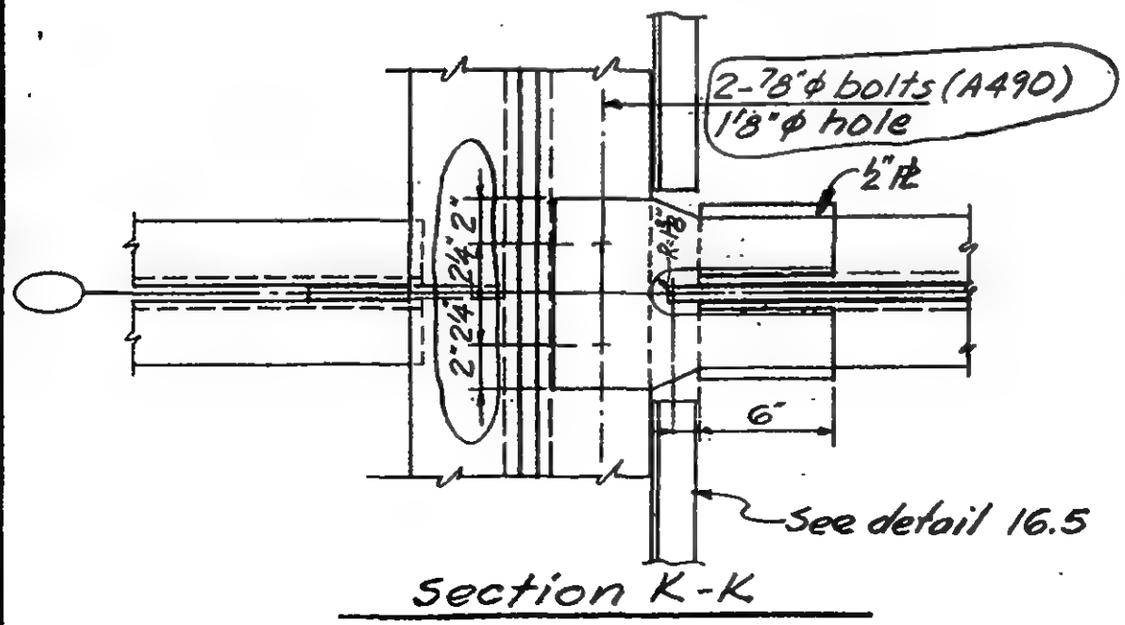

Section K-K

LICENSED PROFESSIONAL ENGINEER — LESLIE E. ROBERTSON — No. 34360 — UNIVERSITY OF THE STATE OF NEW YORK

DESIGNED K. Hwang

DRAWN J. Gricius

REVIEWED W. Brewer

7-B8-8.19

SKILLING, HELLE, CHRISTIANSEN, ROBERTSON — Structural & Civil Engineers

PROJECT: THE WORLD TRADE CENTER | TITLE: FLOOR TRUSS DETAIL & SECTIONS M-M, N-N | DATE: 3-19-69

REVISIONS

7-14-69

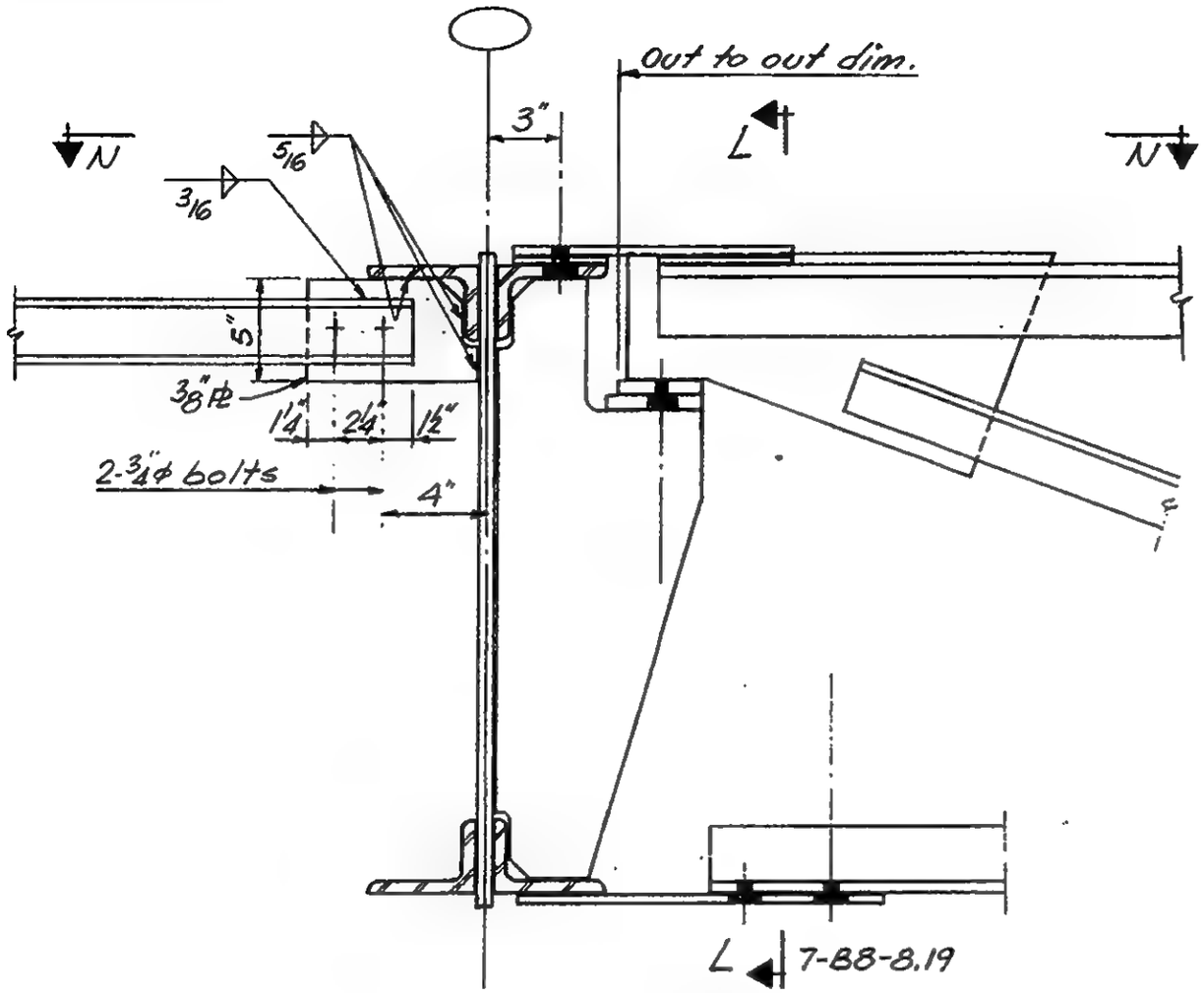

SECTION M-M same as section H-H (7-B8-8.19) except as shown

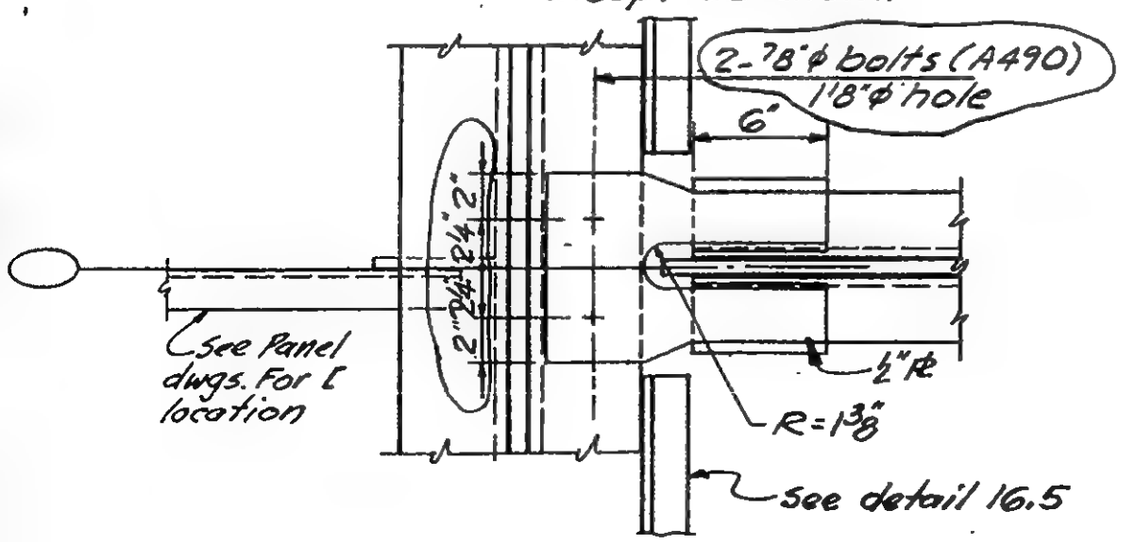

Section N-N

LICENSED PROFESSIONAL ENGINEER — LESLIE E. ROBERTSON — No. 34360 — UNIVERSITY OF THE STATE OF NEW YORK

DESIGNED K. Hwang

DRAWN J. Gricius

REVIEWED W. Brewer

7-B8-8.20

SKILLING, HELLE, CHRISTIANSEN, ROBERTSON — Structural & Civil Engineers

PROJECT: THE WORLD TRADE CENTER

TITLE: FLOOR TRUSS DETAIL 9.1 & 9.2

DATE: 3-19-69

REVISIONS

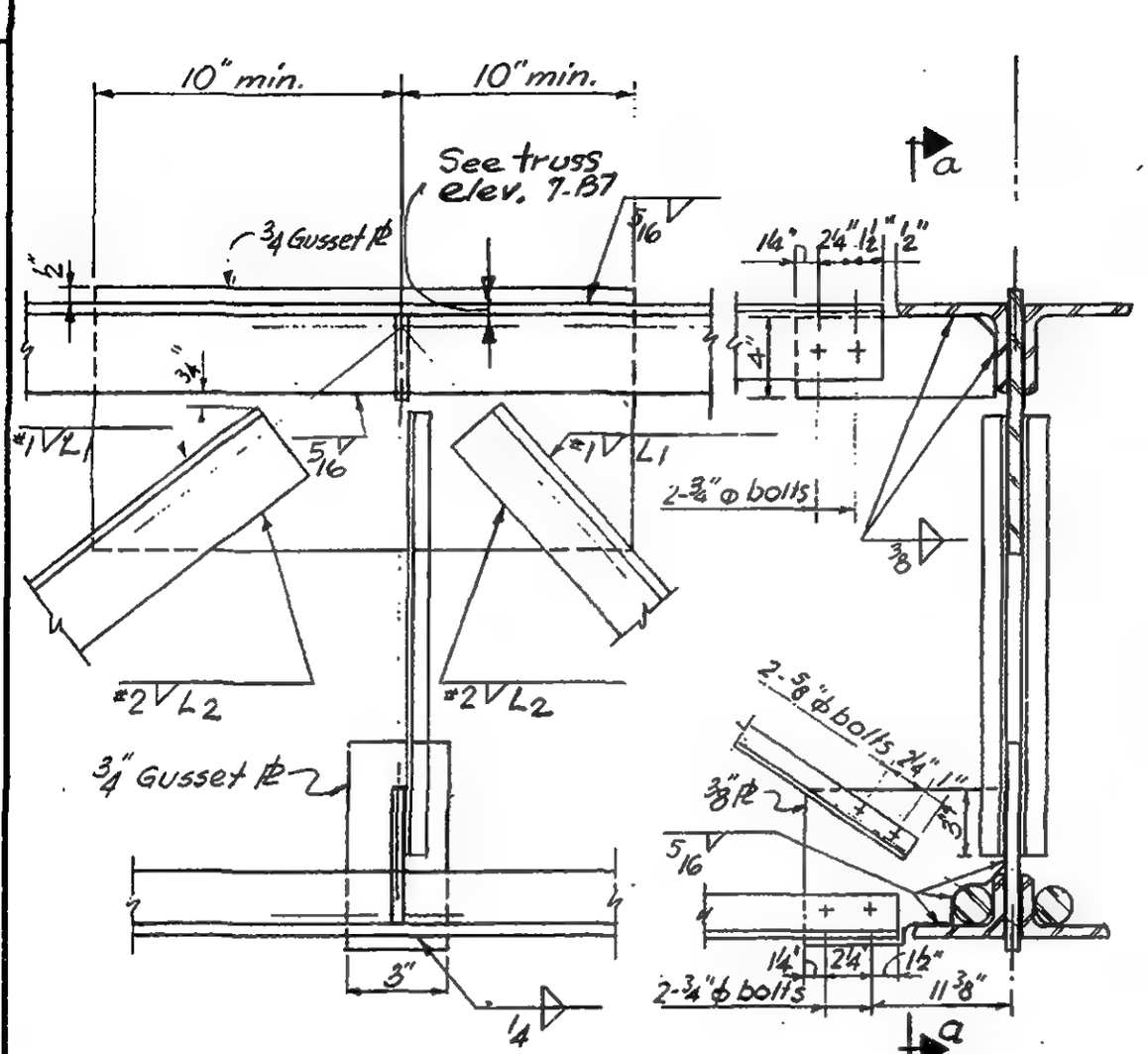

Section a-a

DETAIL 9.1

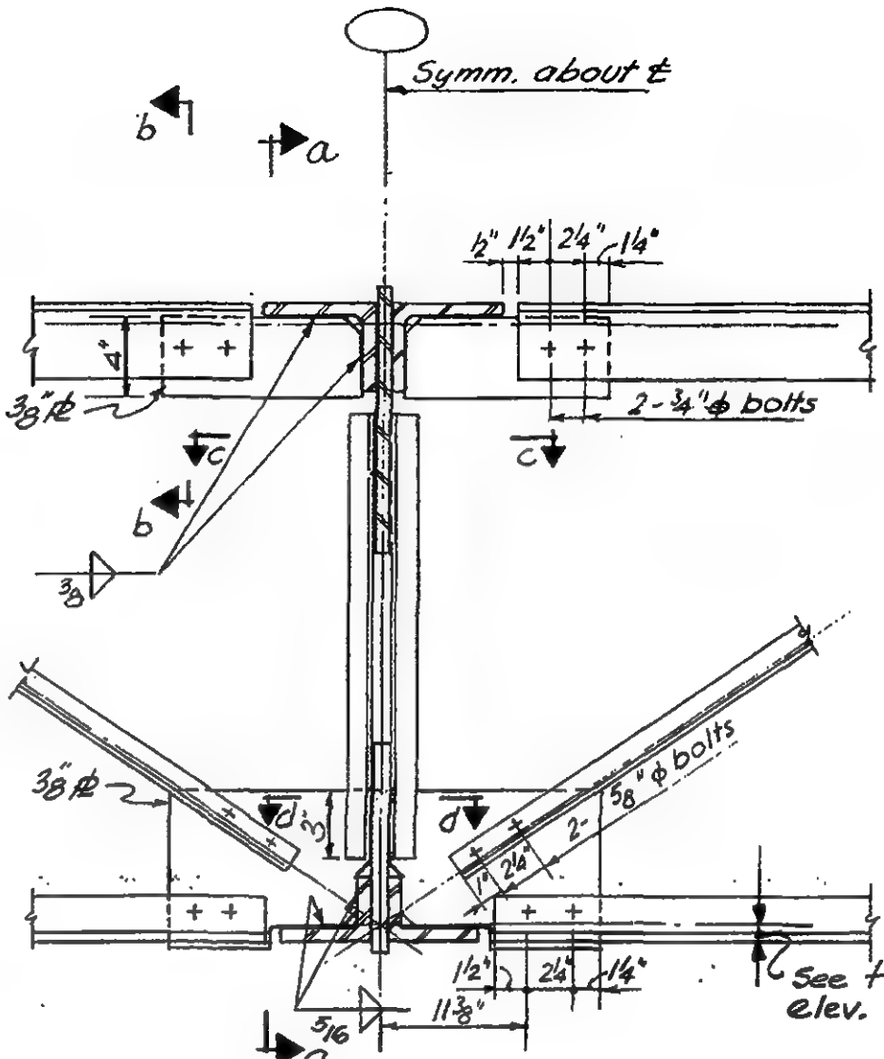

DETAIL 9.2

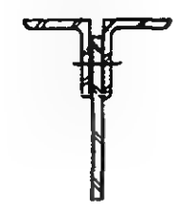

Section b-b

Member Size	Weld #1	L_1	Weld #2	L_2	Sign
1 3/4 x 1 1/4 x 1/4	1/4	6	3/16	4	-
2 1/2 x 1 1/2 x 1/4	1/4	6	3/16	4	-
2 1/2 x 2 x 1/4	1/4	6	3/16	4	-
2 1/2 x 1 1/2 x 5/16	1/4	6	1/4	4	-
4 x 3 1/2 x 7/16	9/16	10	3/8	7	-
1 x 1 x 1/4	1/4	6	3/16	4	+
1 1/4 x 1 1/4 x 1/4	1/4	6	3/16	4	+
2 1/2 x 2 x 1/4	5/16	7	3/16	5	+
3 x 2 x 1/2	7/16	9	3/8	6	+

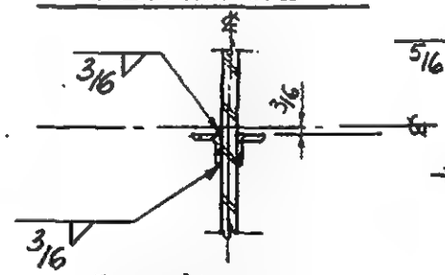

Section c-c

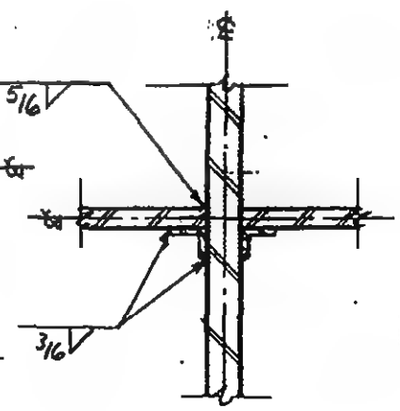

Section d-d

LICENSED PROFESSIONAL ENGINEER — LESLIE E. ROBERTSON — No. 34960 — UNIVERSITY OF THE STATE OF NEW YORK

DESIGNED: K. Hwang

DRAWN: J. Gricius

REVIEWED: W. Brewer

7-B8-9.1

SKILLING, HELLE, CHRISTIANSEN, ROBERTSON — Structural & Civil Engineers

PROJECT: THE WORLD TRADE CENTER | TITLE: DETAIL 10.1 | DATE: 3-19-69

REVISIONS

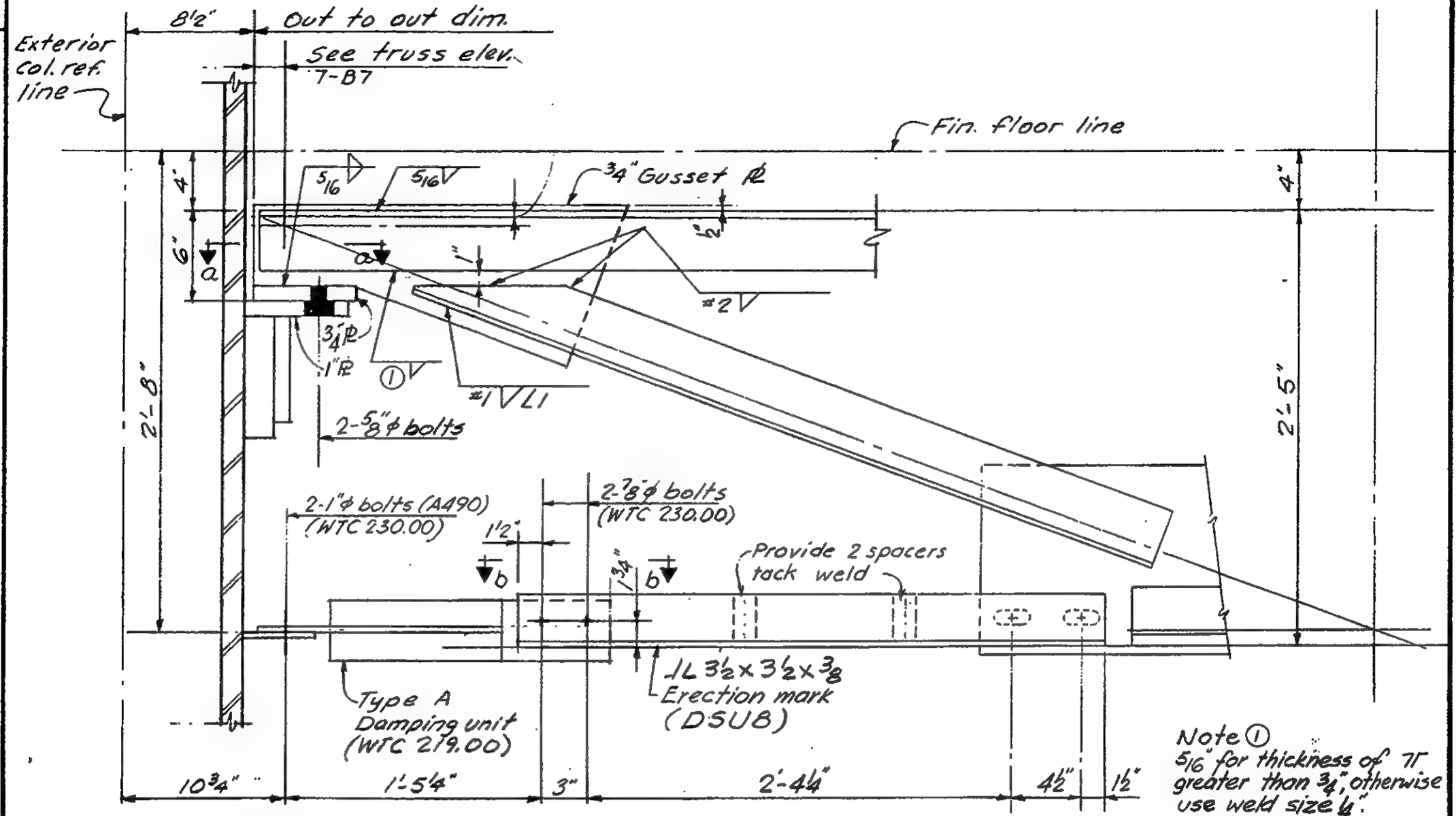

Note ①
5/16" for thickness of 7" greater than ¾", otherwise use weld size ¼".

Member size	End Diagonal		
	weld #1	L1	weld #2
1¼ x 1¼ x ¼	¼	6	3/16
1¾ x 1¾ x ¼	5/16	6	3/16
2½ x 2 x ¼	5/16	7	3/16
2½ x 1½ x 5/16	5/16	7	¼
3 x 2 x ¼	⅜	6	3/16
2½ x 2 x 5/16	⅜	7	¼
2½ x 2 x ⅜	⅜	8	5/16
3 x 2 x ⅜	⅜	9	5/16

Member size	End Diagonal		
	weld #1	L1	weld #2
3 x 2 x 7/16	⅜	9	5/16
3 x 2 x ½	7/16	9	⅜
4 x 3 x ⅜	½	10	5/16
4 x 3½ x ⅜	9/16	10	5/16
4 x 3½ x ½	11/16	10	7/16

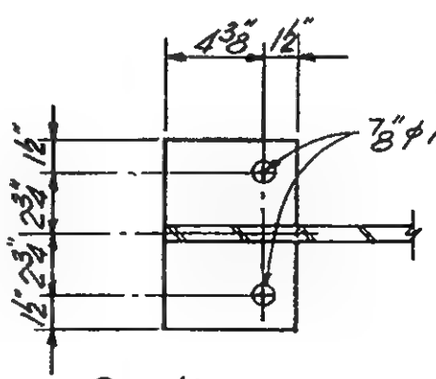

Section a-a

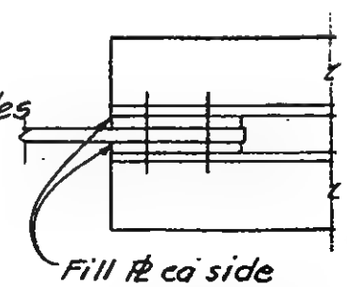

Section b-b

LICENSED PROFESSIONAL ENGINEER — LESLIE E. ROBERTSON — No. 34360 — UNIVERSITY OF THE STATE OF NEW YORK

DESIGNED K. Shwang

DRAWN A.L. FRANQUI

REVIEWED W. Brewer

7-B8-10.1

SKILLING, HELLE, CHRISTIANSEN, ROBERTSON — Structural & Civil Engineers

PROJECT: THE WORLD TRADE CENTER | TITLE: FLOOR TRUSS DETAIL 10.2 | DATE: 3-19-69

REVISIONS

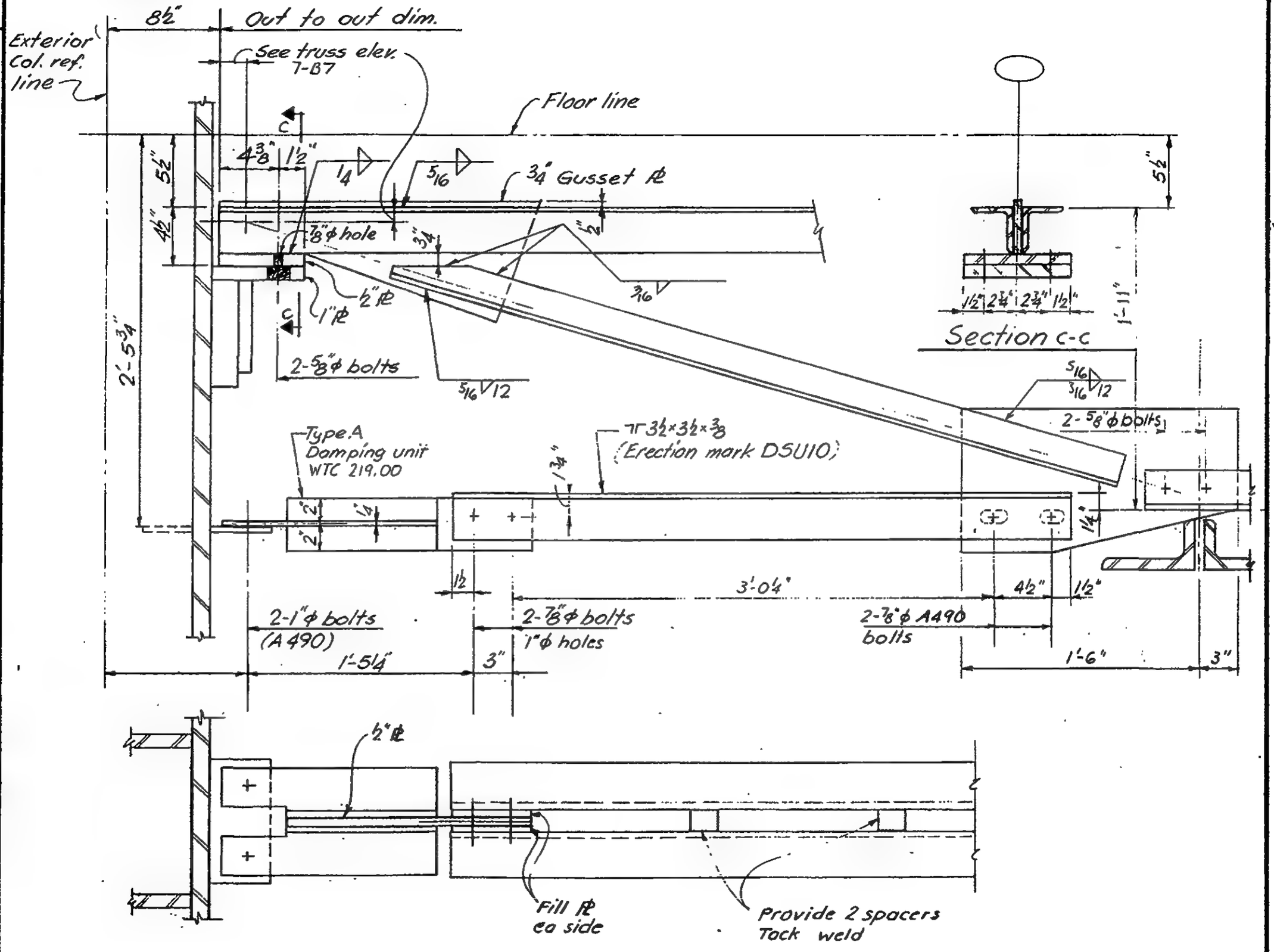

Plan

LICENSED PROFESSIONAL ENGINEER — LESLIE E. ROBERTSON — No. 34360 — UNIVERSITY OF THE STATE OF NEW YORK

DESIGNED K. Hwang

DRAWN J. Gricius

REVIEWED W. Brewer

7-B8-10.2

SKILLING, HELLE, CHRISTIANSEN, ROBERTSON — Structural & Civil Engineers

PROJECT: THE WORLD TRADE CENTER | TITLE: FLOOR TRUSS DETAIL 10.3 | DATE: 3-19-69

REVISIONS

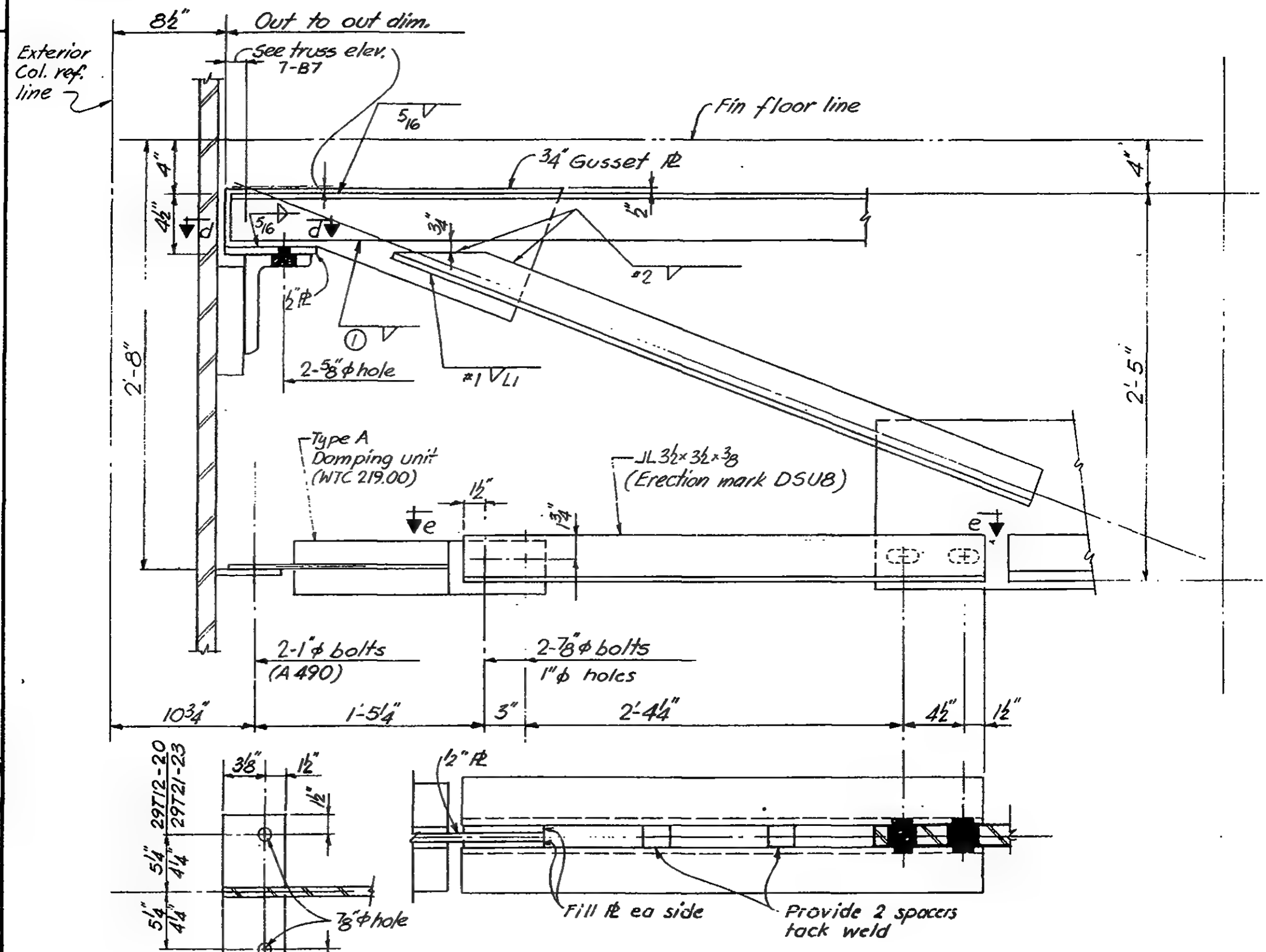

Section d-d

Plan Section e-e

See table detail 10.1 for welds.

LICENSED PROFESSIONAL ENGINEER — LESLIE E. ROBERTSON — No. 34360 — UNIVERSITY OF THE STATE OF NEW YORK

DESIGNED K. Hwang

DRAWN J. Gricius

REVIEWED W. Brewer

7-B8-10.3

SKILLING, HELLE, CHRISTIANSEN, ROBERTSON — Structural & Civil Engineers

PROJECT: THE WORLD TRADE CENTER | TITLE: FLOOR TRUSS DETAIL 10.4 | DATE: 3-19-69

REVISIONS

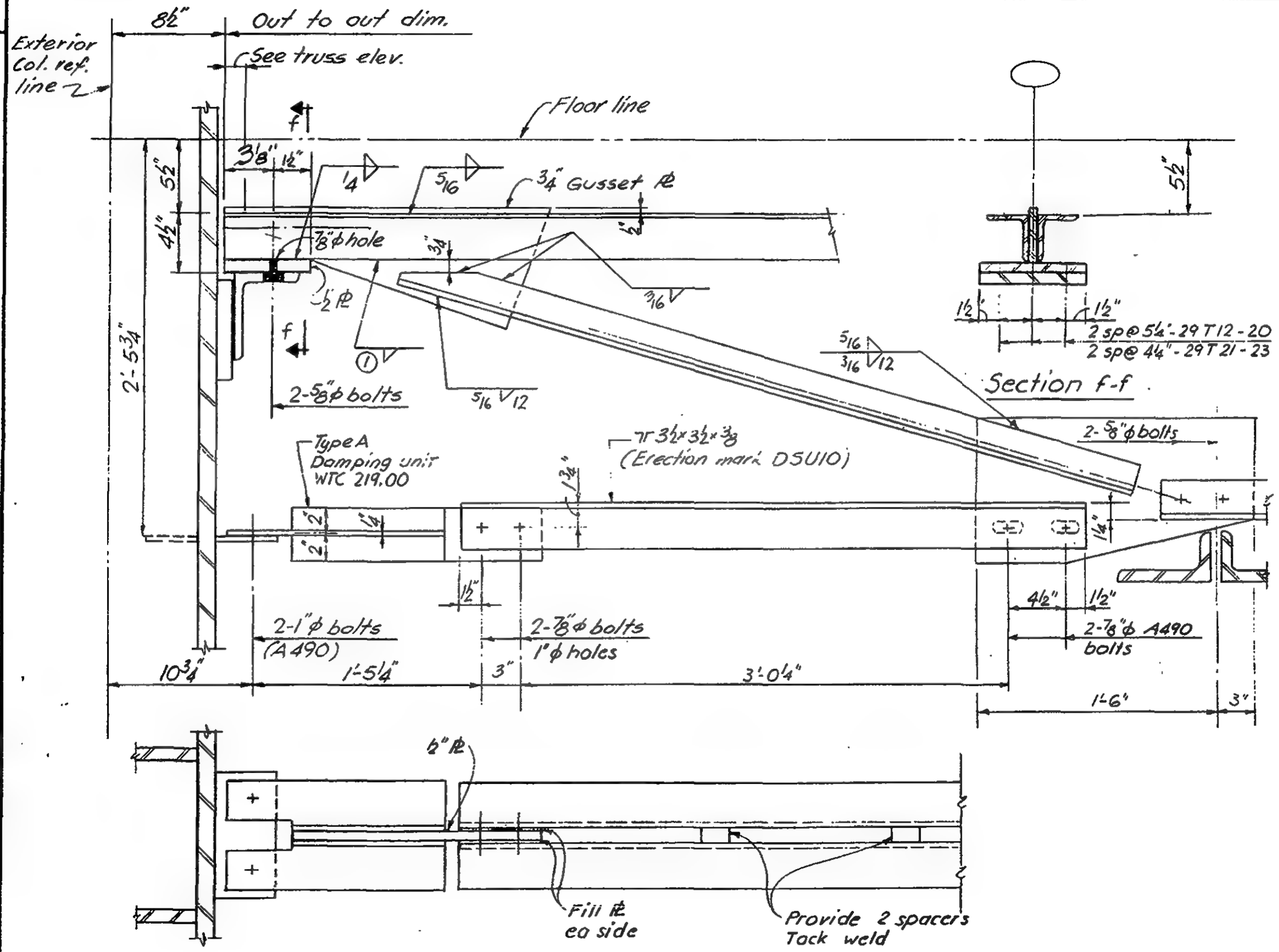

Plan

LICENSED PROFESSIONAL ENGINEER — LESLIE E. ROBERTSON — No. 34360 — UNIVERSITY OF THE STATE OF NEW YORK

DESIGNED K. Hwang

DRAWN J. Gricius

REVIEWED W. Brewer

7-B8-10.4

SKILLING, HELLE, CHRISTIANSEN, ROBERTSON — Structural & Civil Engineers

PROJECT: THE WORLD TRADE CENTER | TITLE: FLOOR TRUSS DETAIL 10.5 | DATE: 3-19-69

REVISIONS

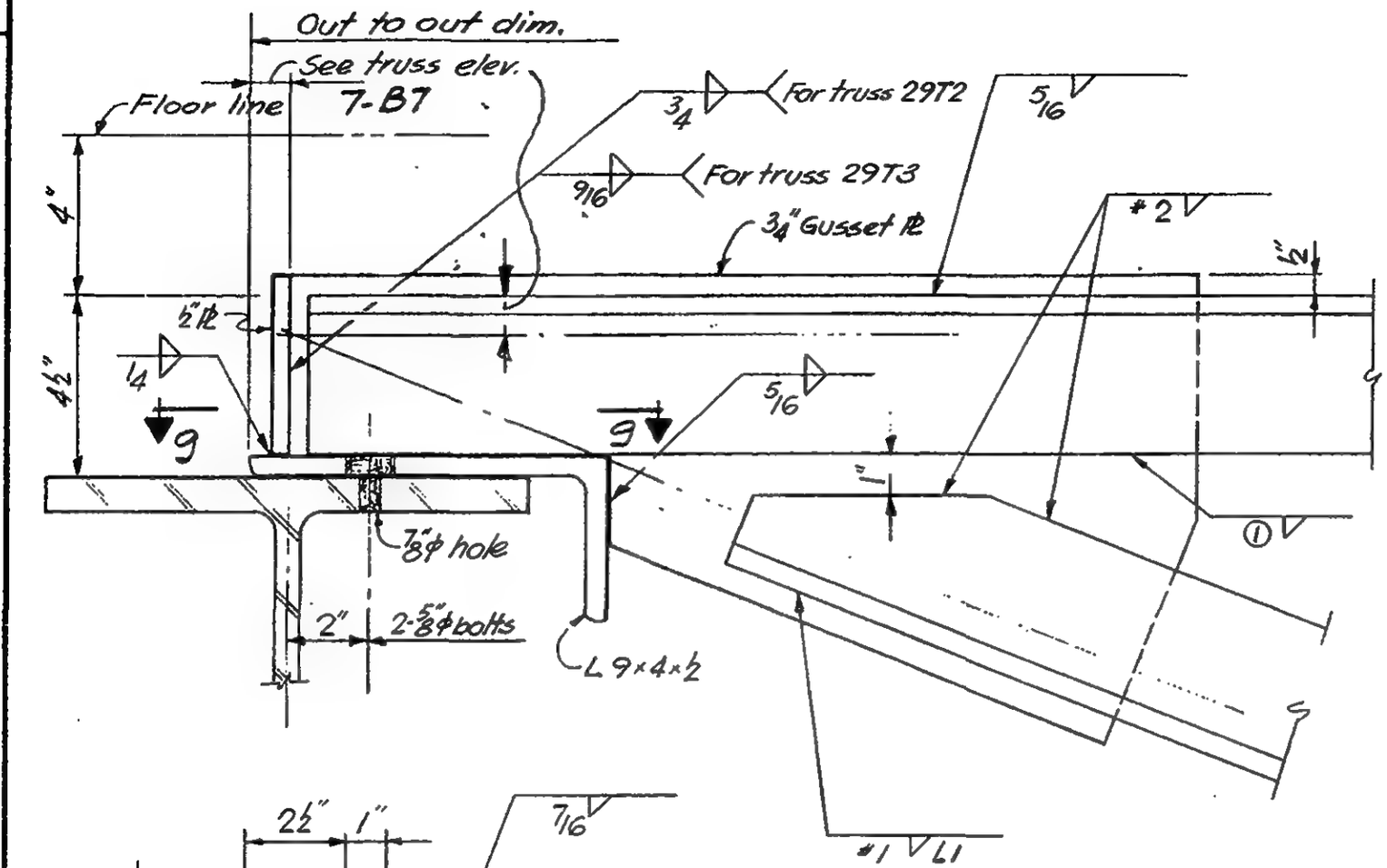

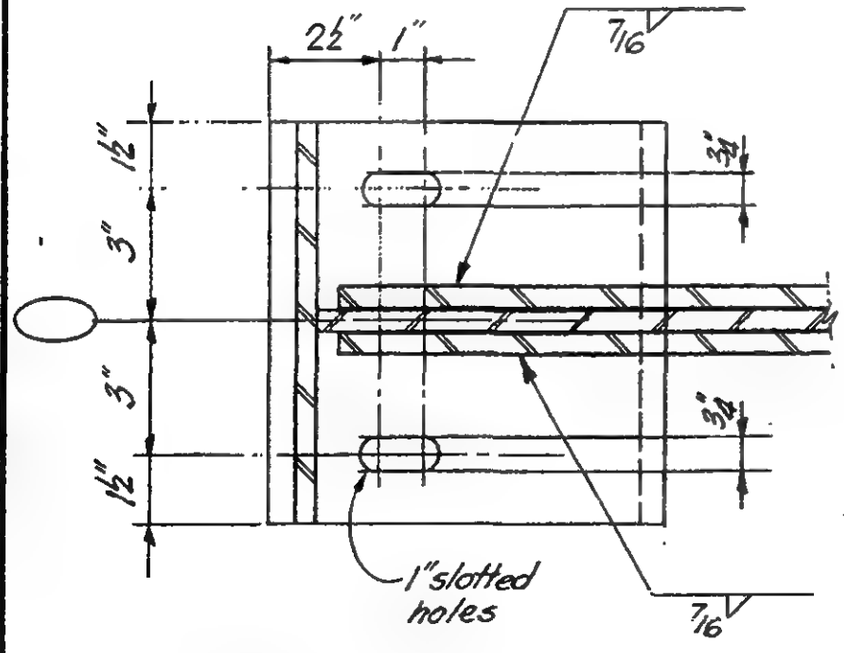

Plan Section 9-9

See table detail 10.1 for welds.

LICENSED PROFESSIONAL ENGINEER — LESLIE E. ROBERTSON — No. 34360 — UNIVERSITY OF THE STATE OF NEW YORK

DESIGNED K. Hwang
DRAWN J. Gricius
REVIEWED W. Brewer

7-B8-10.5

SKILLING, HELLE, CHRISTIANSEN, ROBERTSON — Structural & Civil Engineers

PROJECT: THE WORLD TRADE CENTER | TITLE: FLOOR TRUSS DETAIL 10.6 | DATE: 3-19-69

REVISIONS

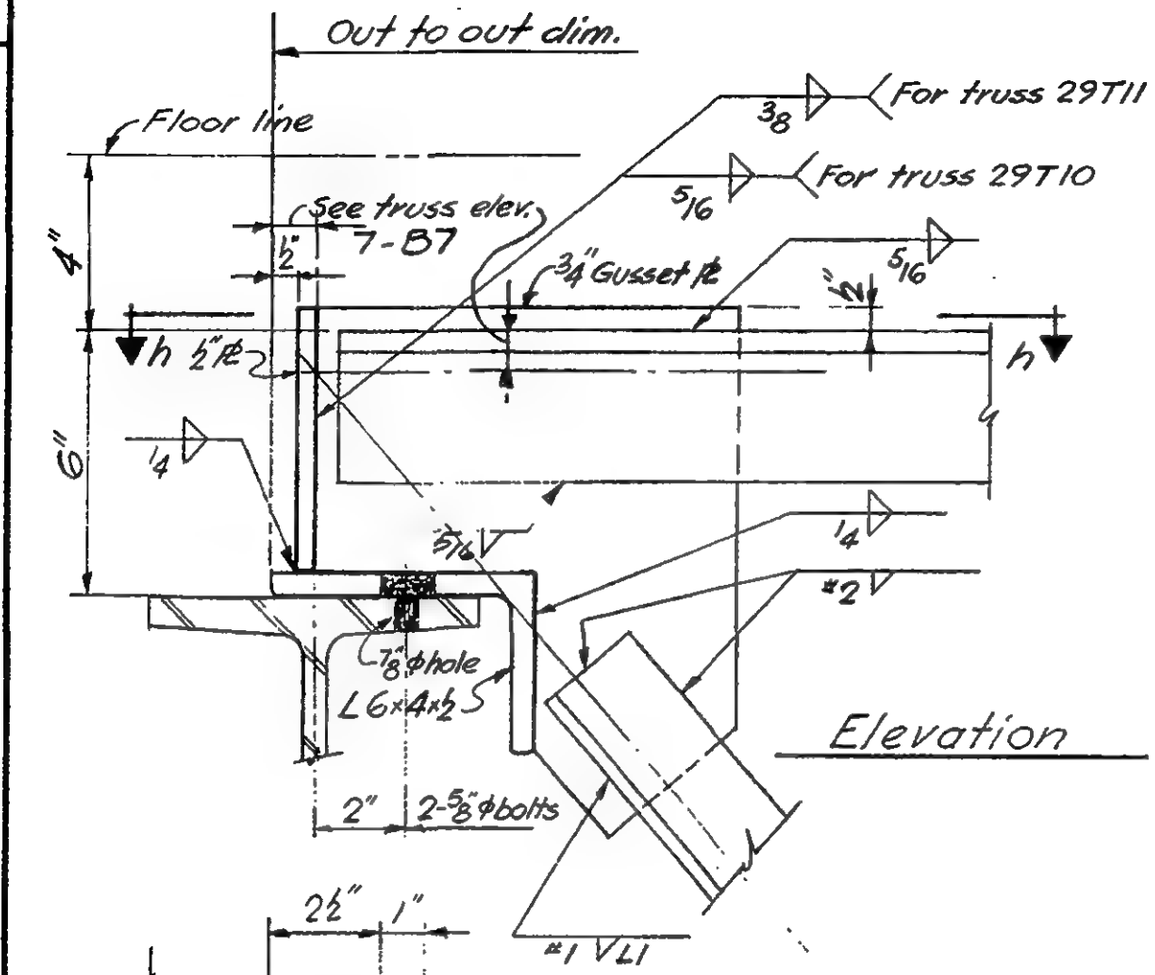

Elevation

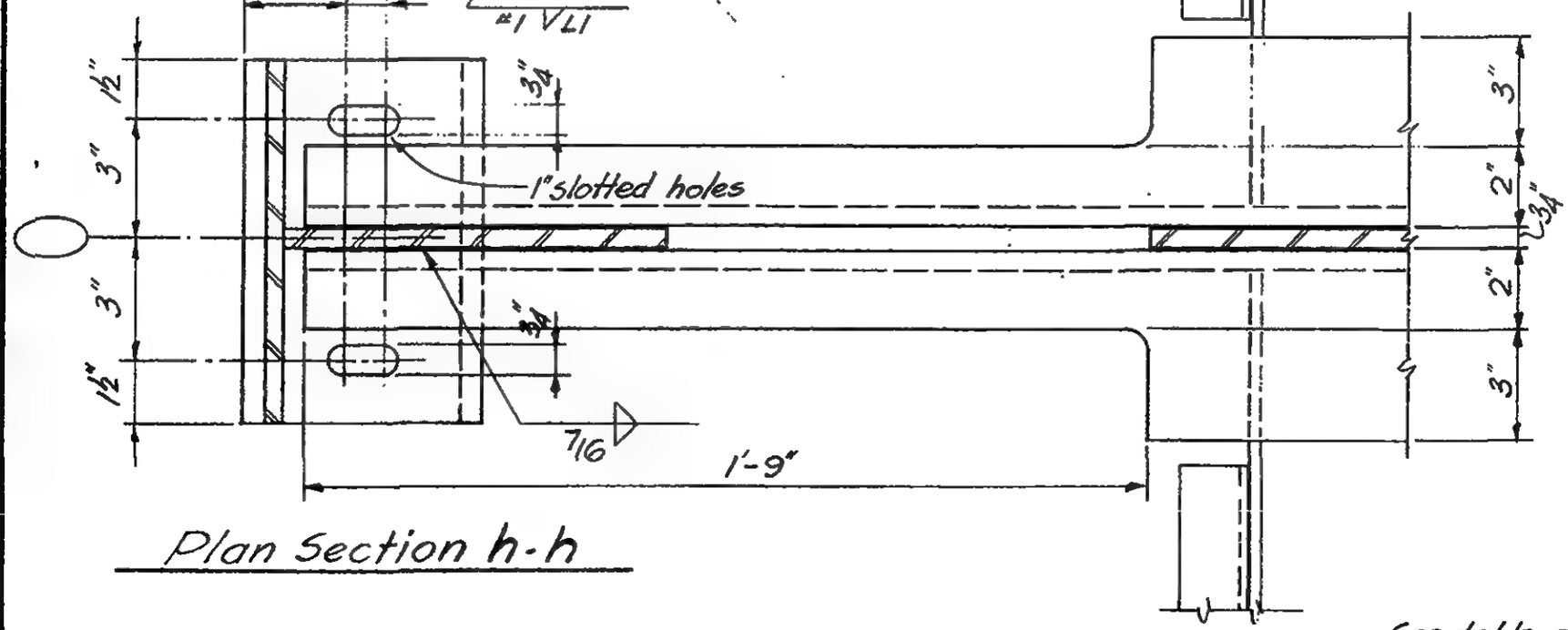

Plan Section h-h

See table detail 10.1 for welds.

LICENSED PROFESSIONAL ENGINEER — LESLIE E. ROBERTSON — No. 34360 — UNIVERSITY OF THE STATE OF NEW YORK

DESIGNED K. Hwang
DRAWN J. Gricius
REVIEWED W. Brewer

R.

7-B8-10.6

SKILLING, HELLE, CHRISTIANSEN, ROBERTSON — Structural & Civil Engineers

PROJECT: THE WORLD TRADE CENTER | TITLE: FLOOR TRUSS DETAIL 10.7 | DATE: 3-19-69

REVISIONS

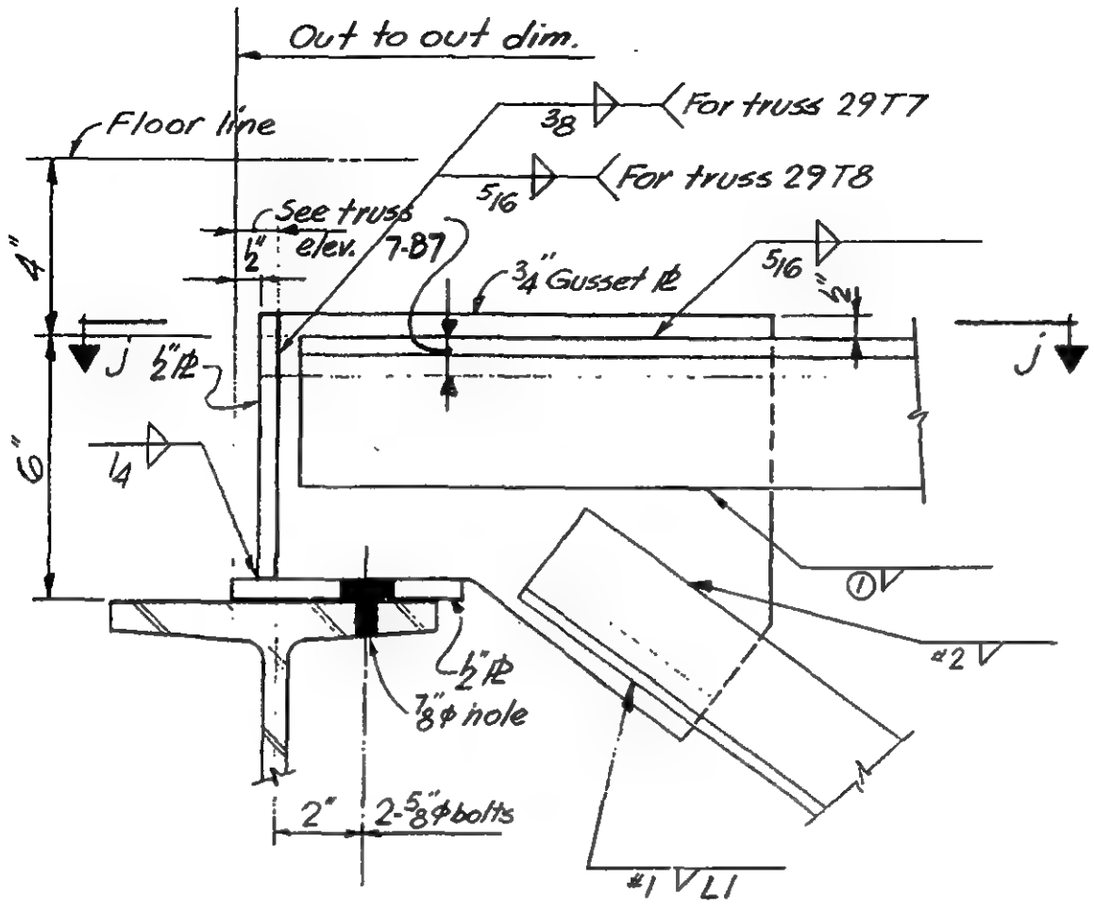

Elevation

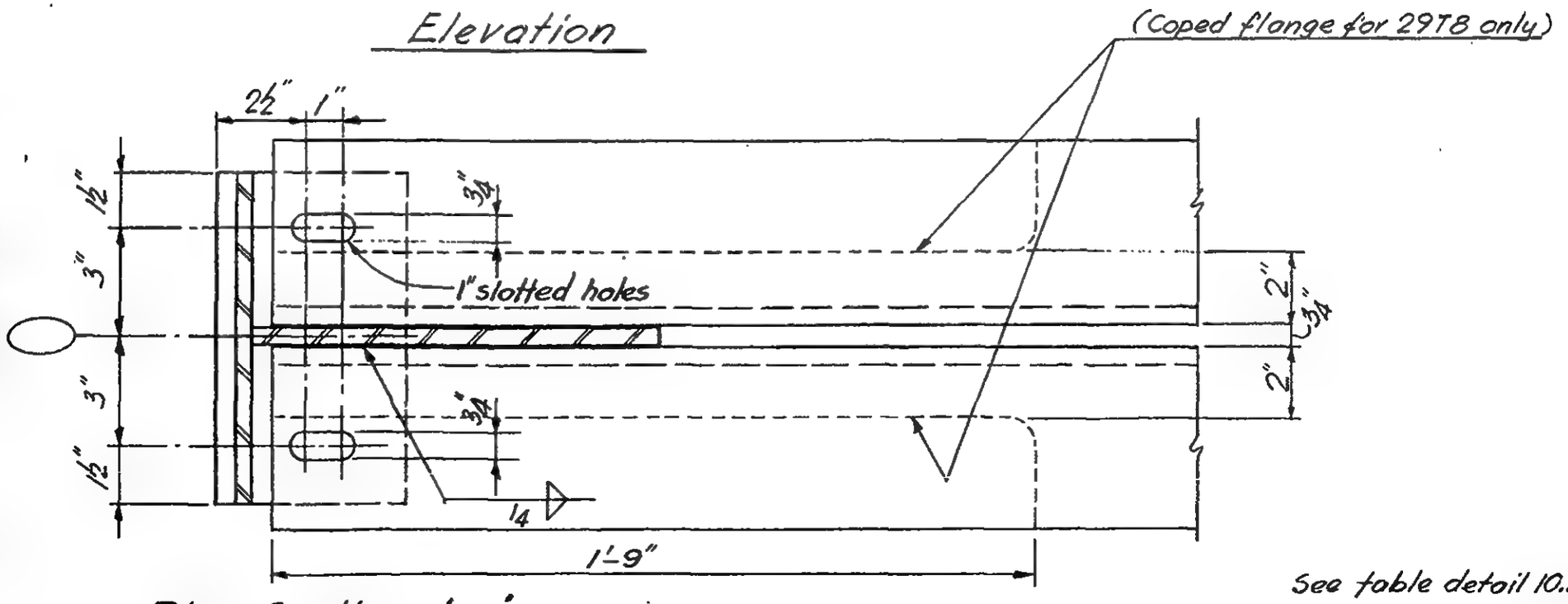

R. Plan Section j-j

See table detail 10.1 for welds.

LICENSED PROFESSIONAL ENGINEER — LESLIE E. ROBERTSON — No. 34360 — UNIVERSITY OF THE STATE OF NEW YORK

DESIGNED K. Hwang
DRAWN J. Gricius
REVIEWED W. Brewer

7-B8-10.7

SKILLING, HELLE, CHRISTIANSEN, ROBERTSON — Structural & Civil Engineers

PROJECT THE WORLD TRADE CENTER | TITLE FLOOR TRUSS DETAIL 10.8 | DATE 3-19-69

REVISIONS

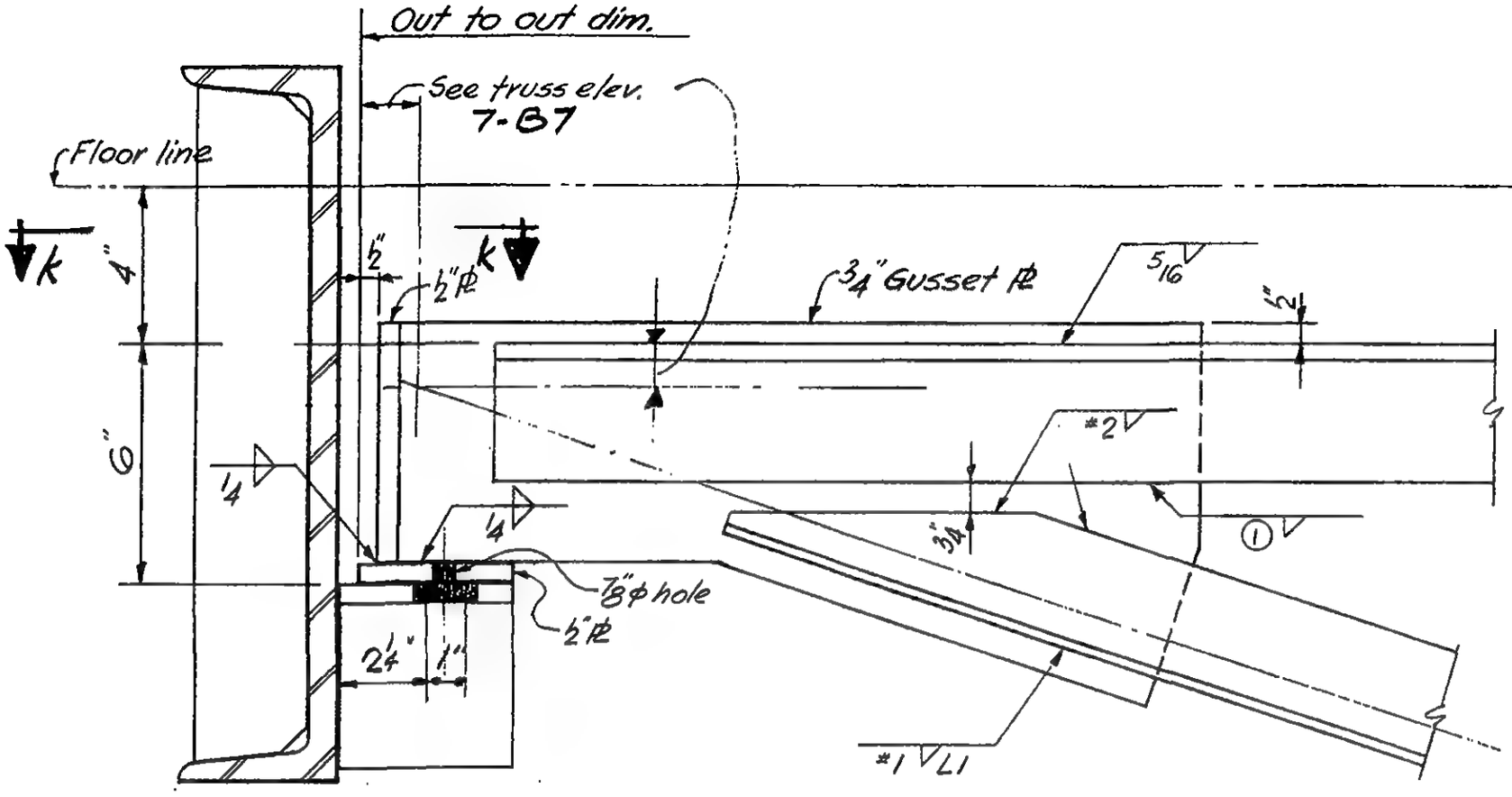

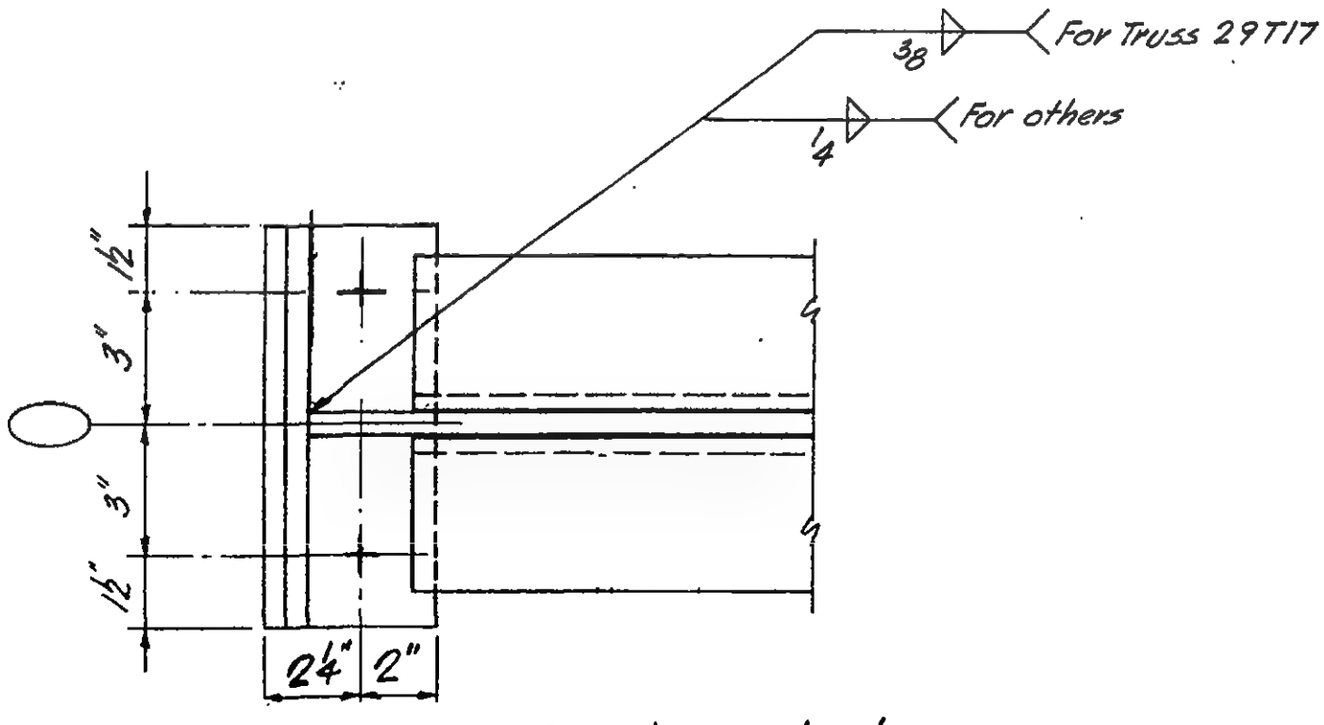

Plan Section K-K

See table detail 10.1 for welds.

7-B8-10.8

LICENSED PROFESSIONAL ENGINEER
LESLIE E. ROBERTSON
No. 34360
UNIVERSITY OF THE STATE OF NEW YORK

DESIGNED K. Ibwang
DRAWN J. Griclus
REVIEWED W. Brewer

SKILLING, HELLE, CHRISTIANSEN, ROBERTSON — Structural & Civil Engineers

PROJECT: THE WORLD TRADE CENTER | TITLE: FLOOR TRUSS DETAIL 10.9 | DATE: 3-19-69

REVISIONS

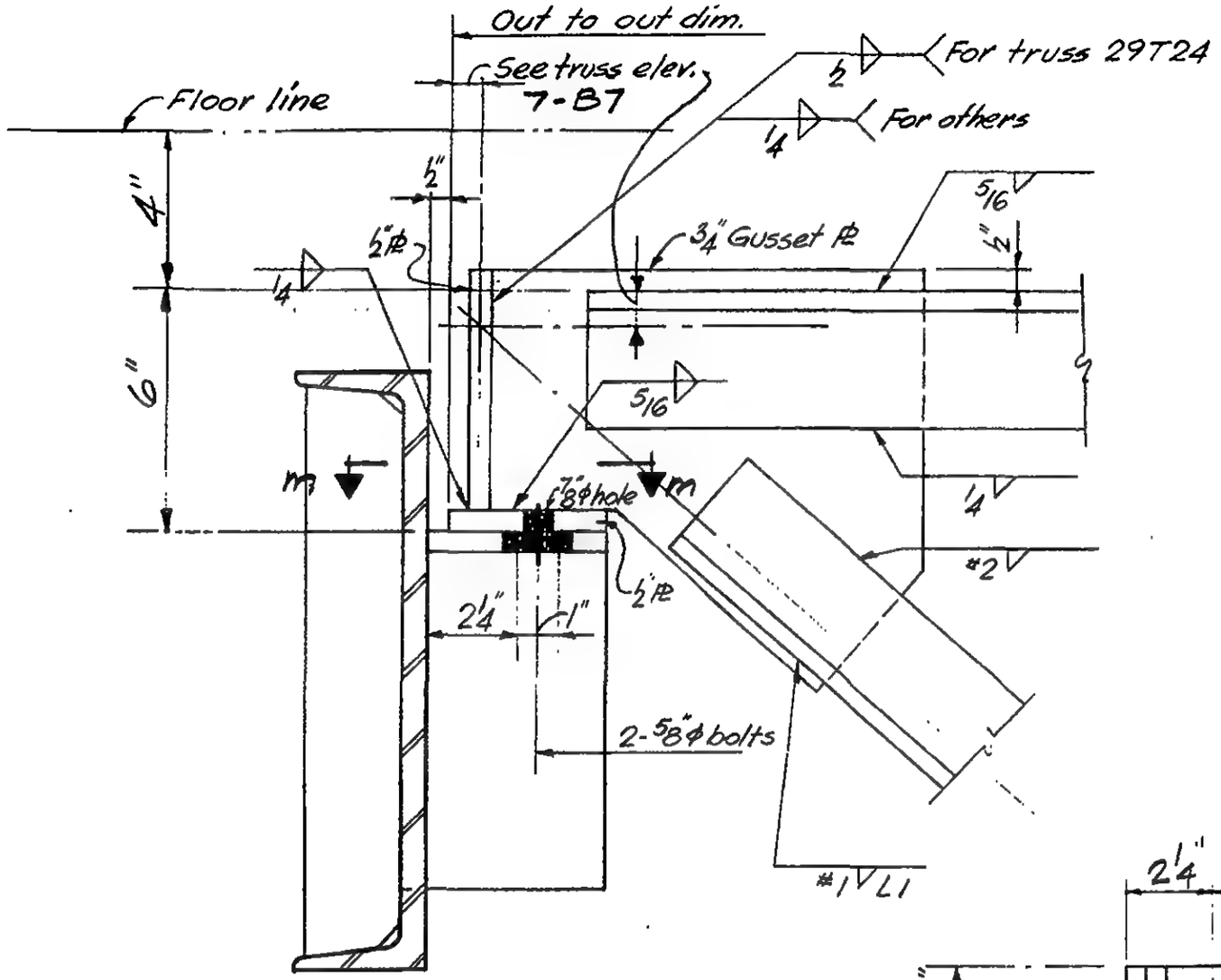

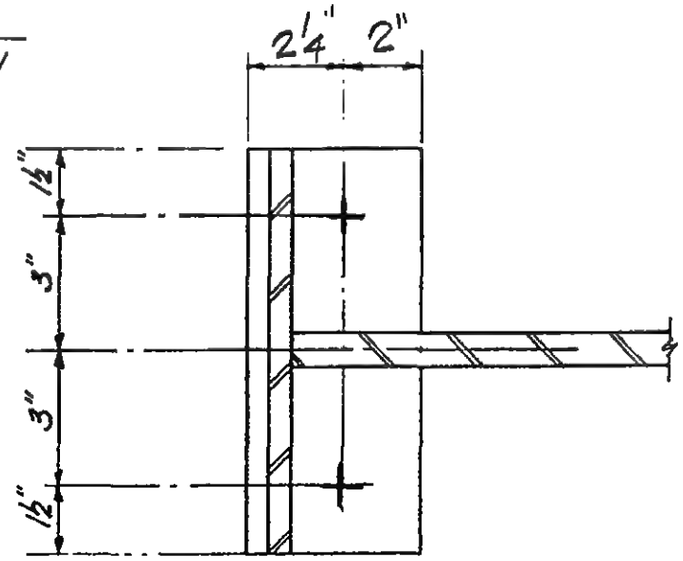

Plan Section m-m

See table Detail 10.1 for welds.

LICENSED PROFESSIONAL ENGINEER — LESLIE E. ROBERTSON — No. 34960 — UNIVERSITY OF THE STATE OF NEW YORK

DESIGNED K. Hwang

DRAWN J. Gricius

REVIEWED W. Brewer

7-B8-10.9

SKILLING, HELLE, CHRISTIANSEN, ROBERTSON — Structural & Civil Engineers

PROJECT THE WORLD TRADE CENTER | TITLE FLOOR TRUSS DETAIL 12.12 | DATE 3-19-69

REVISIONS

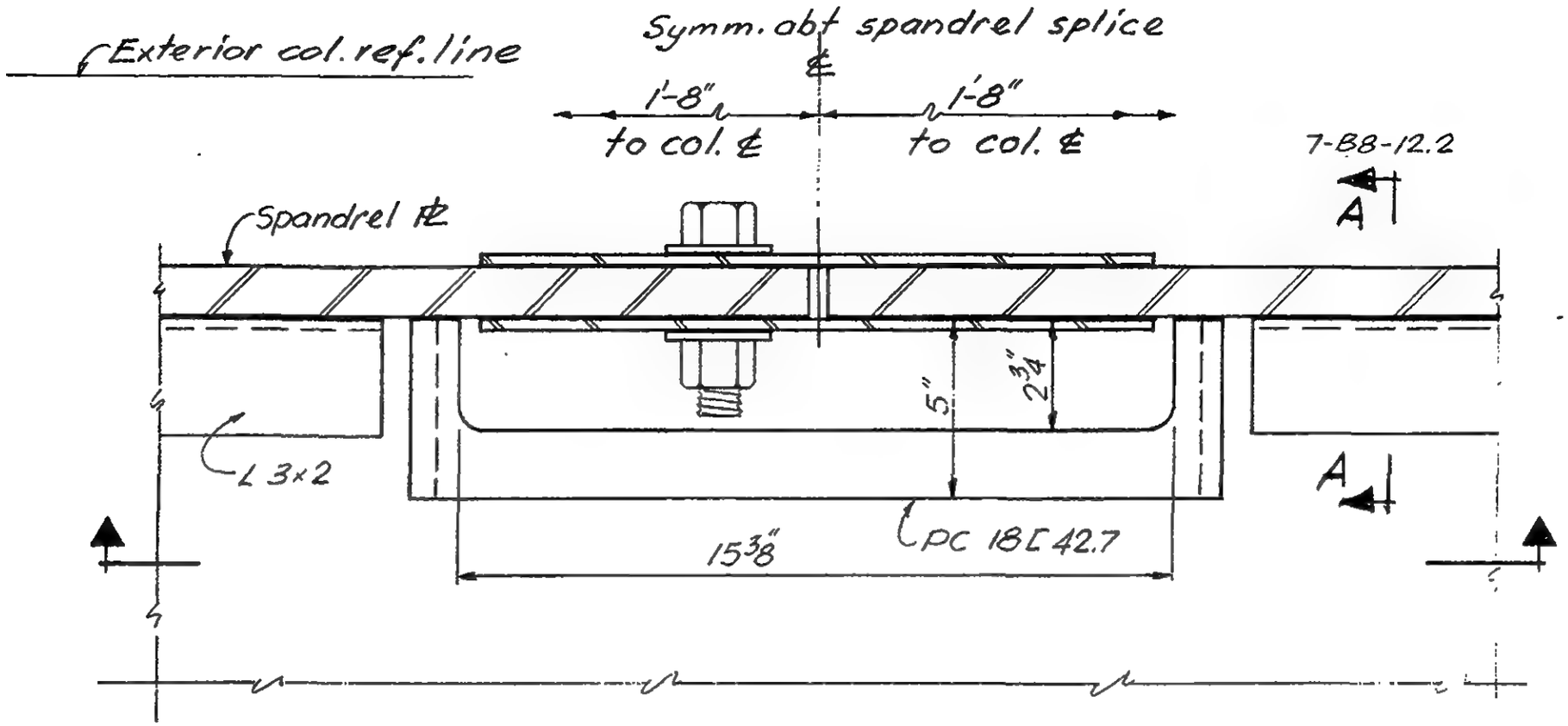

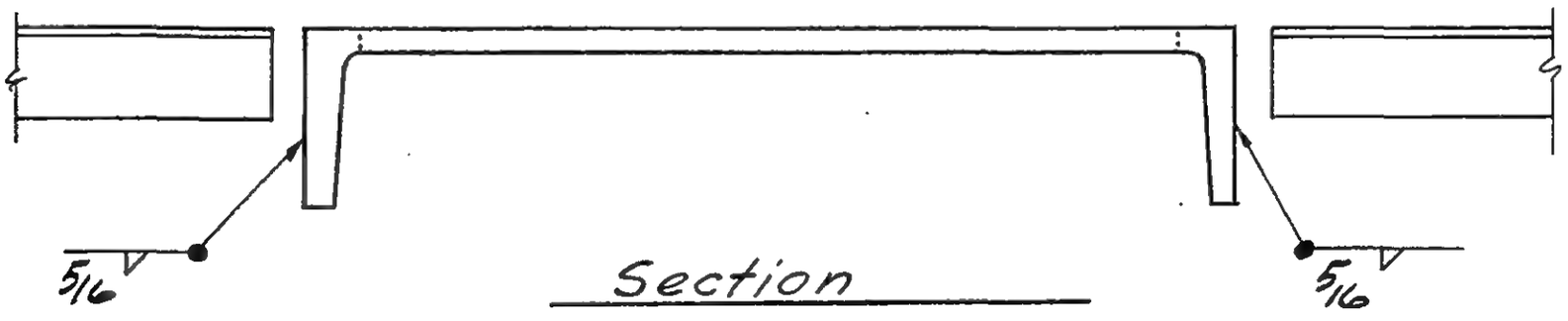

Section

LICENSED PROFESSIONAL ENGINEER
LESLIE E. ROBERTSON
No. 34960
UNIVERSITY OF THE STATE OF NEW YORK

DESIGNED

DRAWN

REVIEWED W. Brewer

7-B8-12.5

SKILLING, HELLE, CHRISTIANSEN, ROBERTSON — Structural & Civil Engineers

PROJECT: THE WORLD TRADE CENTER | TITLE: FLOOR TRUSS DETAIL 13.1 | DATE: 3-19-69

REVISIONS

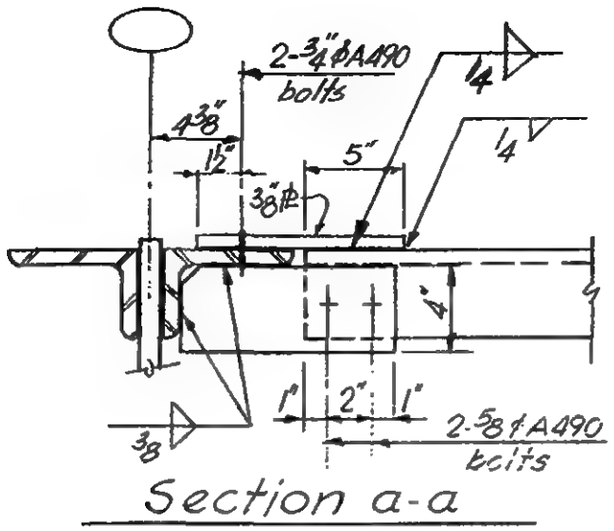

Section a-a

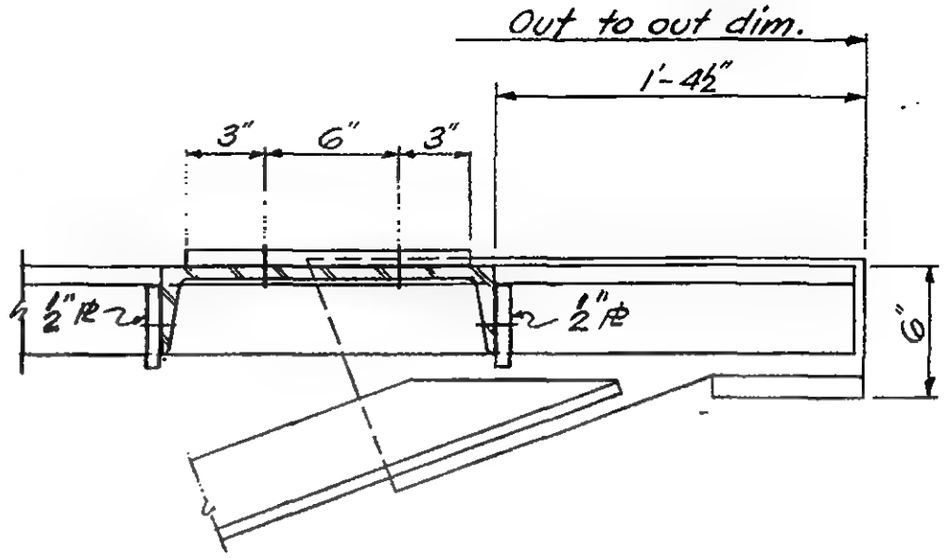

Section b-b

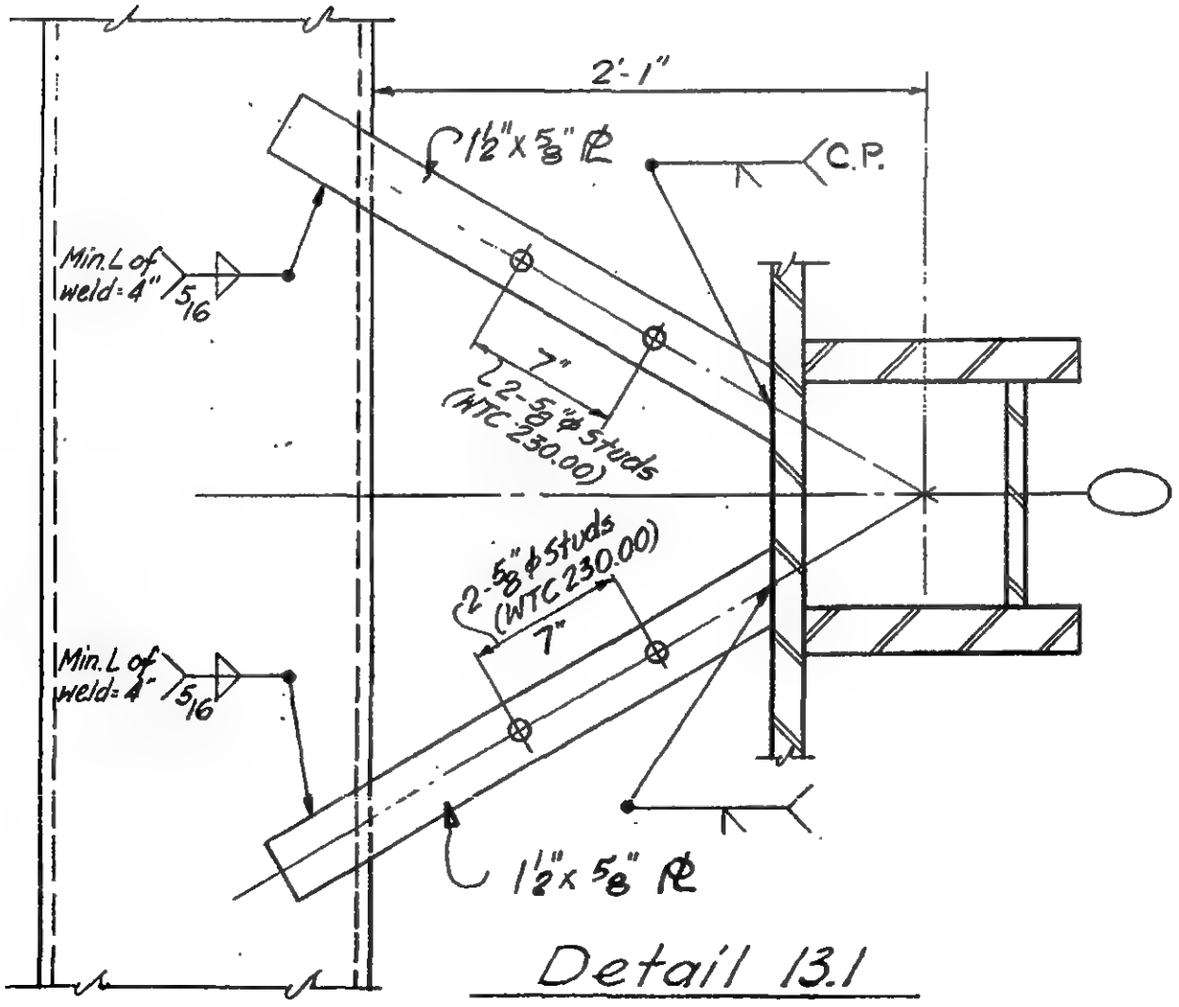

Detail 13.1

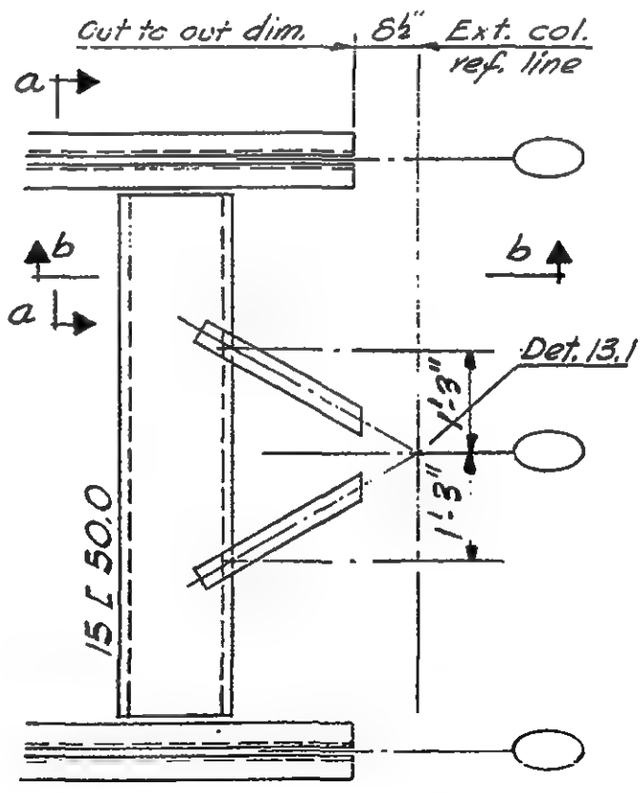

Plan

LICENSED PROFESSIONAL ENGINEER — LESLIE E. ROBERTSON — No. 34360 — UNIVERSITY OF THE STATE OF NEW YORK

DESIGNED K. Hwang
DRAWN J. Gricius
REVIEWED W. Brewer

7-B8-13.1

SKILLING, HELLE, CHRISTIANSEN, ROBERTSON — Structural & Civil Engineers

PROJECT: THE WORLD TRADE CENTER | TITLE: FLOOR TRUSS DETAIL 13.2 , 13.4 | DATE: 3-19-69

REVISIONS

7-14-69

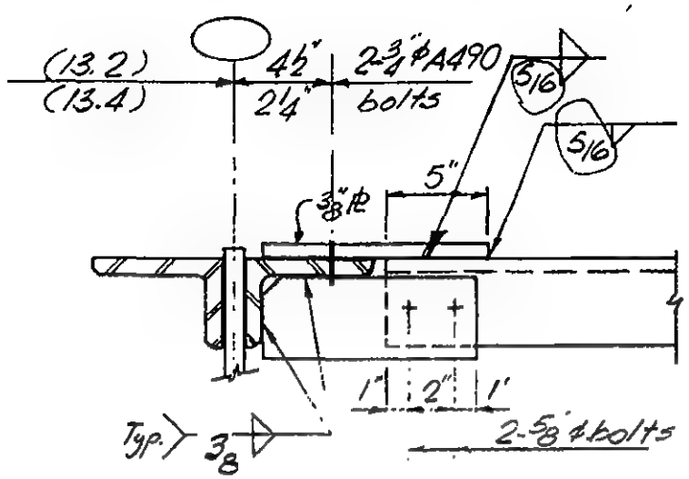

Section c-c

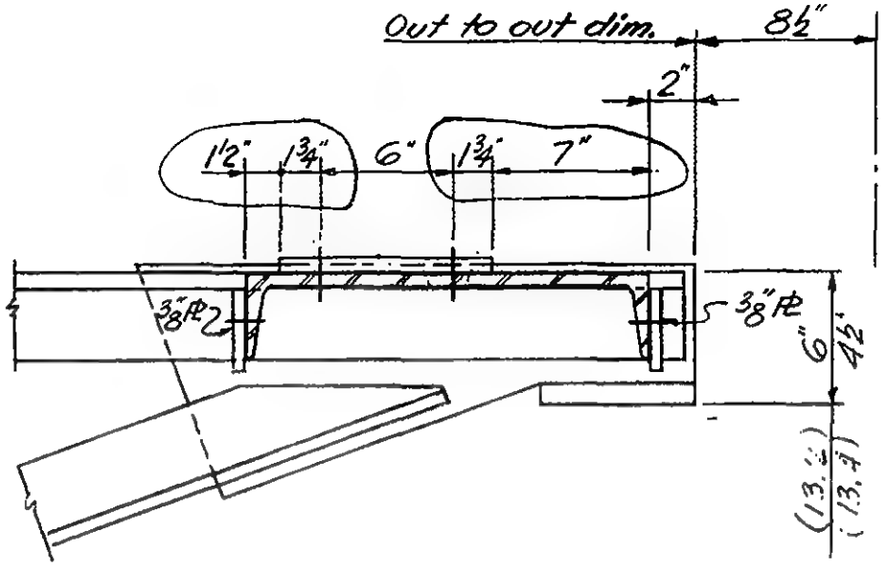

Section d-d

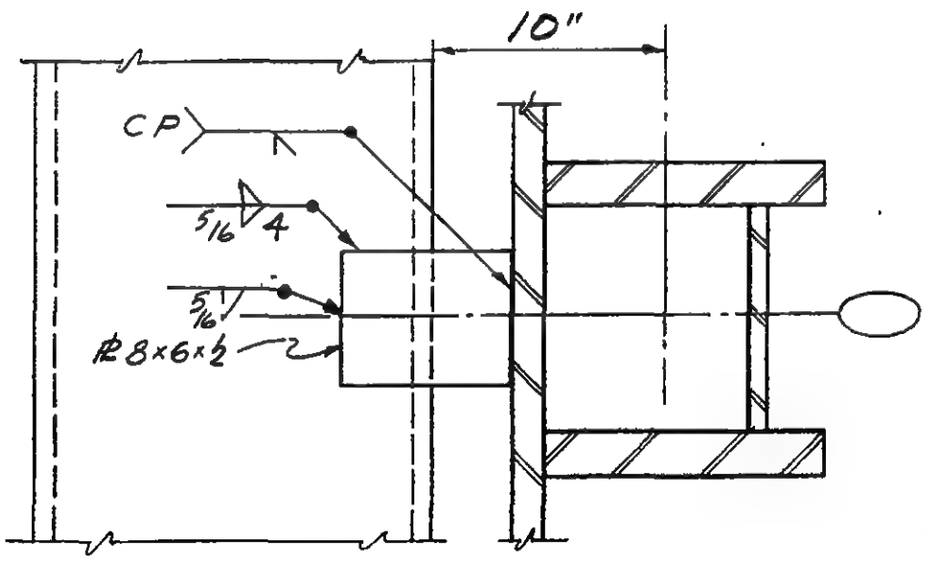

Detail 13.2

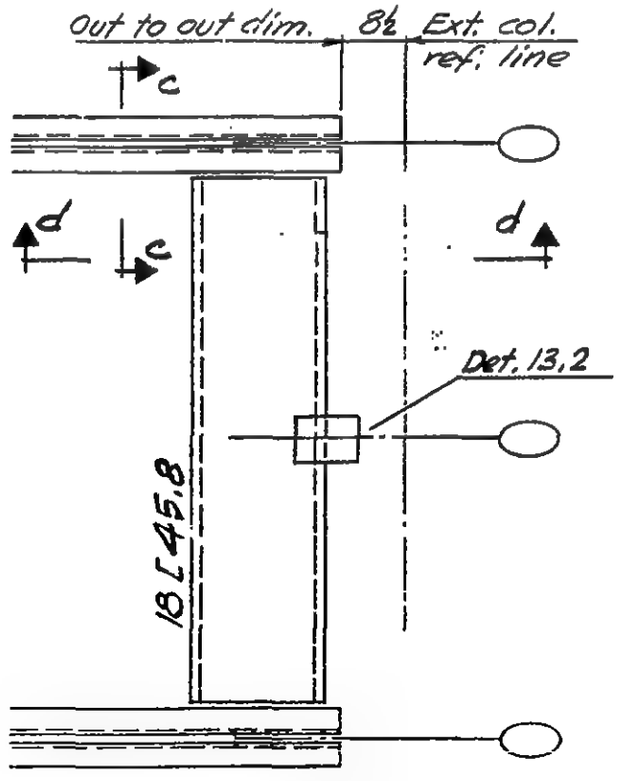

Plan

LICENSED PROFESSIONAL ENGINEER
LESLIE E ROBERTSON
No. 34360
UNIVERSITY OF THE STATE OF NEW YORK

DESIGNED K. Hwang
DRAWN J. Gricius
REVIEWED W. Brower R.

7-B8-13.2

SKILLING, HELLE, CHRISTIANSEN, ROBERTSON — Structural & Civil Engineers

PROJECT THE WORLD TRADE CENTER | TITLE FLOOR TRUSS DETAIL 13.3 | DATE 3-19-69

REVISIONS

7-14-69

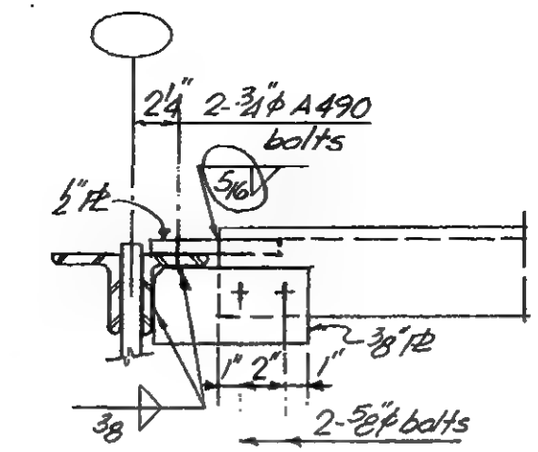

Section e-e

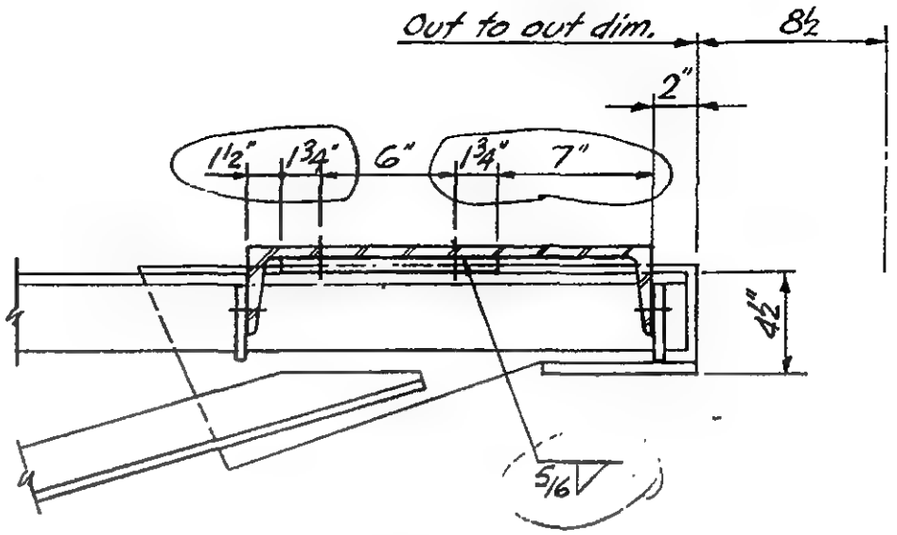

Section f-f

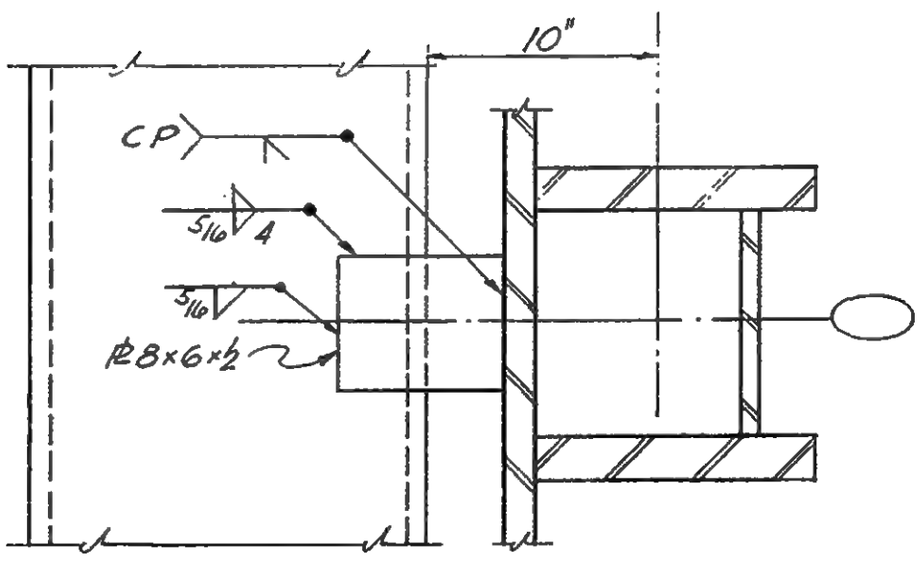

Detail 13.3

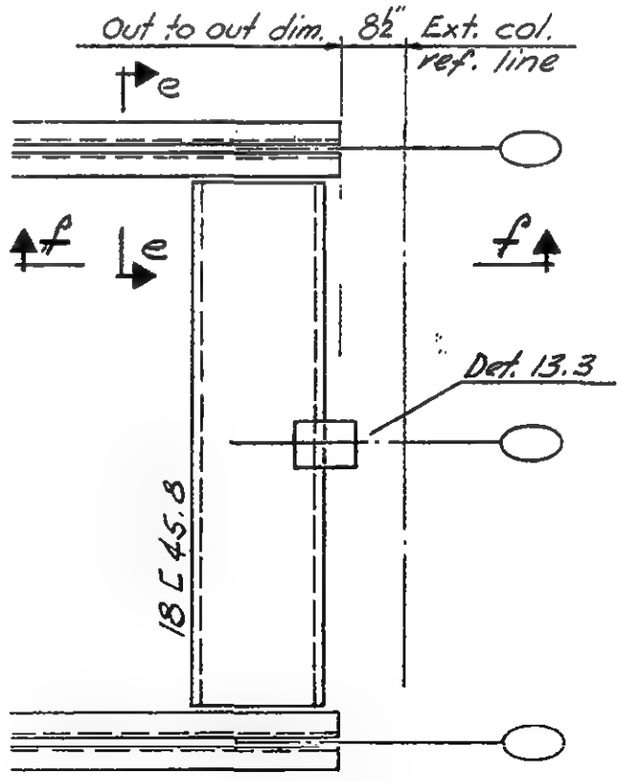

Plan

LICENSED PROFESSIONAL ENGINEER — LESLIE E. ROBERTSON — No. 34360 — UNIVERSITY OF THE STATE OF NEW YORK

DESIGNED K. Hwang

DRAWN J. Gricius

REVIEWED W. Brewer

R.

7-B8-13.3

SKILLING, HELLE, CHRISTIANSEN, ROBERTSON — Structural & Civil Engineers

PROJECT: THE WORLD TRADE CENTER | TITLE: FLOOR TRUSS DETAIL 14.1 | DATE: 3-19-69

REVISIONS

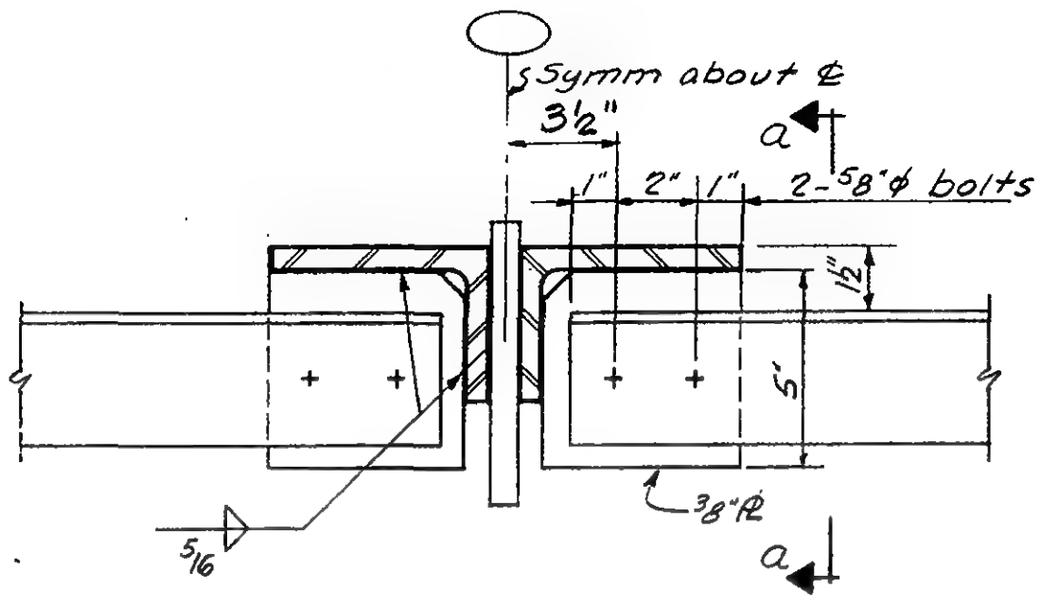

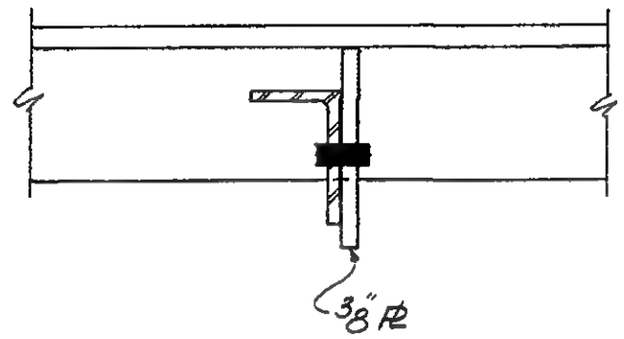

Section a-a

LICENSED PROFESSIONAL ENGINEER
LESLIE E. ROBERTSON
No. 34360
UNIVERSITY OF THE STATE OF NEW YORK

DESIGNED K. Hwang
DRAWN J. Gricius
REVIEWED W. Brewer

7-BB-14.1

SKILLING, HELLE, CHRISTIANSEN, ROBERTSON — Structural & Civil Engineers

PROJECT: THE WORLD TRADE CENTER | TITLE: FLOOR TRUSS DETAIL 15.1 | DATE: 3-19-69

REVISIONS

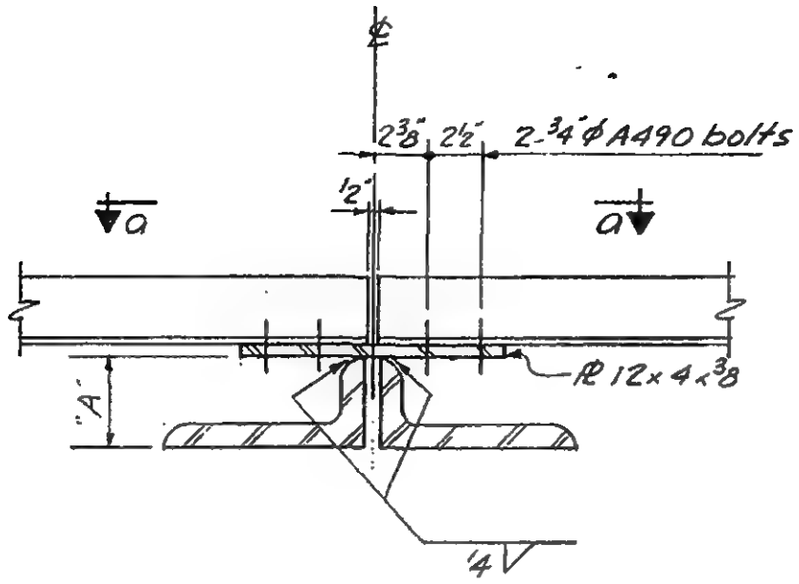

DETAIL 15.1 For A = 4" Min

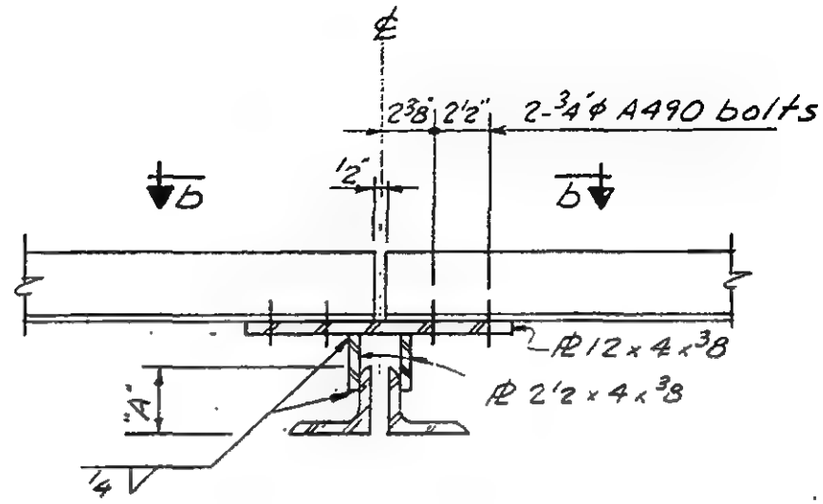

DETAIL 15.1 For A < 4"

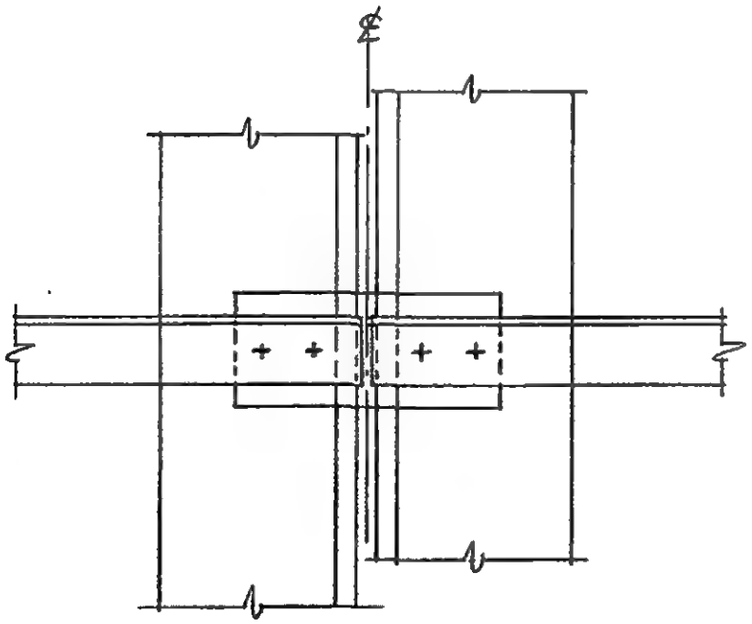

Section a-a

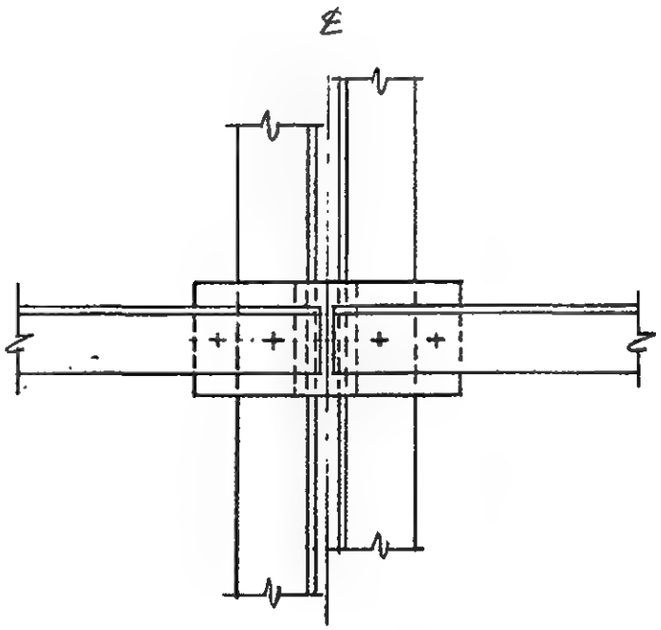

Section b-b

LICENSED PROFESSIONAL ENGINEER
LESLIE E. ROBERTSON
No. 34960
UNIVERSITY OF THE STATE OF NEW YORK

DESIGNED K. Hwang
DRAWN A.L. FRANQUI
REVIEWED W Brewer

7-B8-15.1

SKILLING, HELLE, CHRISTIANSEN, ROBERTSON — Structural & Civil Engineers

PROJECT THE WORLD TRADE CENTER | TITLE FLOOR TRUSS DETAIL 15.2 | DATE 3-19-69

REVISIONS

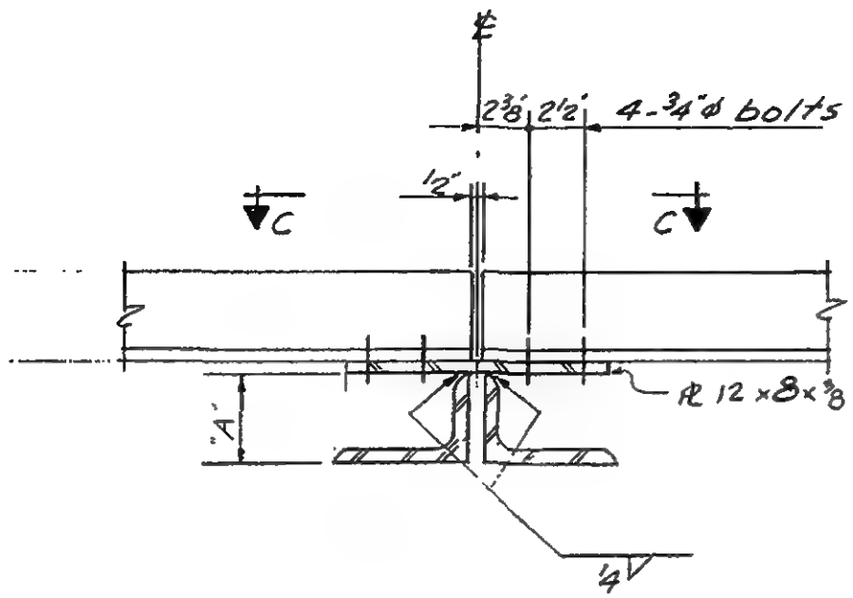

DETAIL 15.2 For A = 4" Min

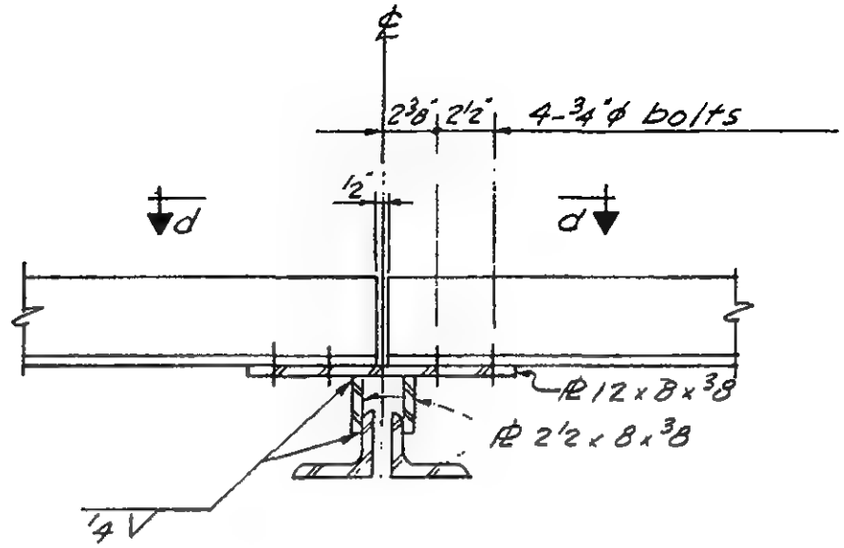

DETAIL 15.2 For A < 4"

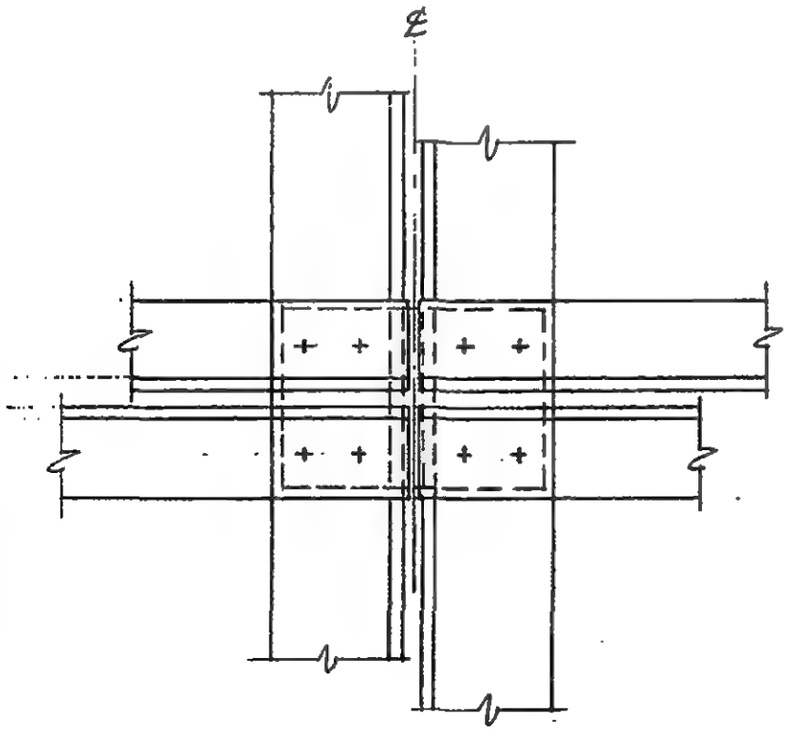

Section C-C

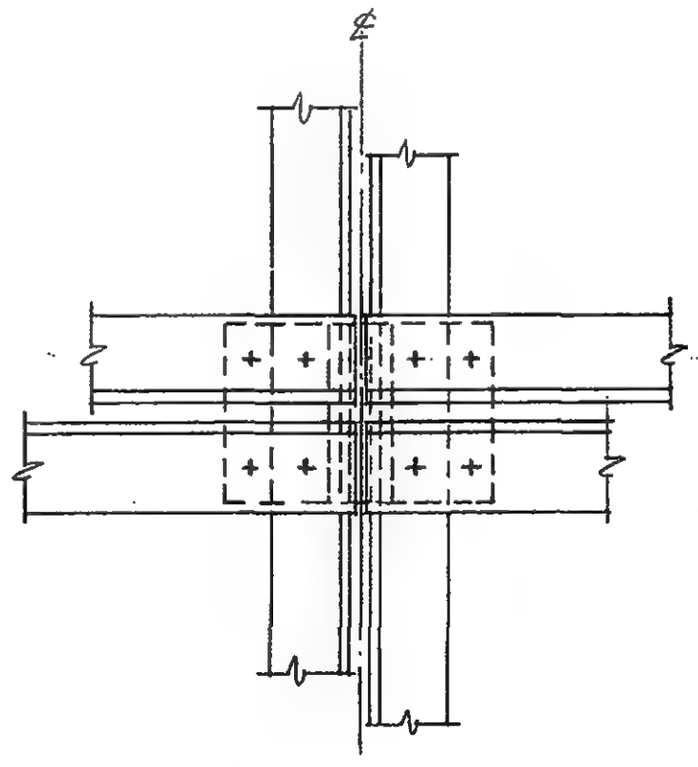

Section d-d

LICENSED PROFESSIONAL ENGINEER
LESLIE E. ROBERTSON
No. 34360
UNIVERSITY OF THE STATE OF NEW YORK

DESIGNED K. Hwang
DRAWN A.L. FRANQUI
REVIEWED W. Brewer

7-B8-15.2

SKILLING, HELLE, CHRISTIANSEN, ROBERTSON — Structural & Civil Engineers

PROJECT: THE WORLD TRADE CENTER | TITLE: FLOOR TRUSS DETAIL 16.1-16.6 | DATE: 3-19-69

REVISIONS

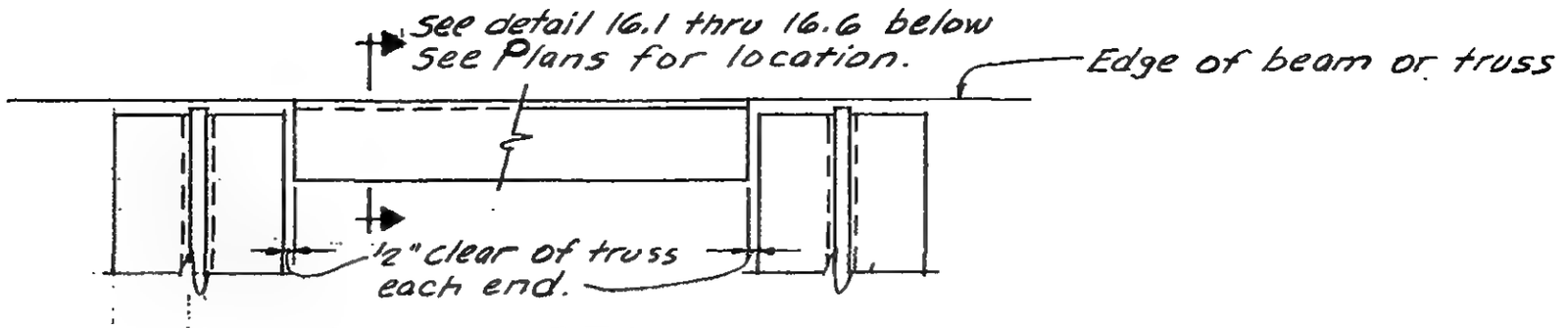

TYPICAL DETAIL 16

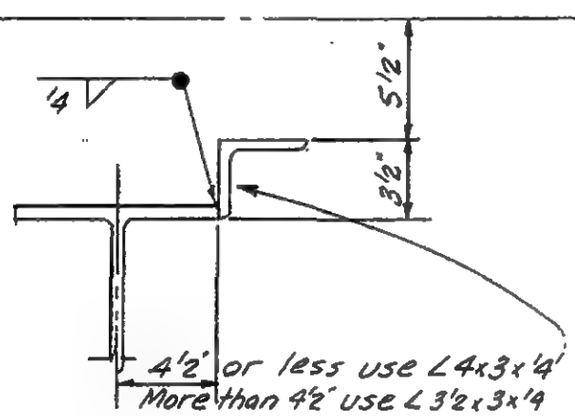

Detail 16.1

Typical East & West core perimeter floors 10, 11 & 12

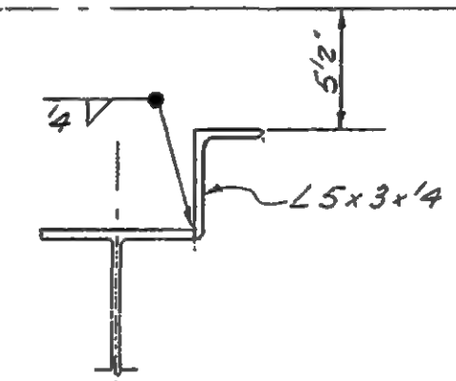

Detail 16.2

Typical South core perimeter floors 10, 11 & 12

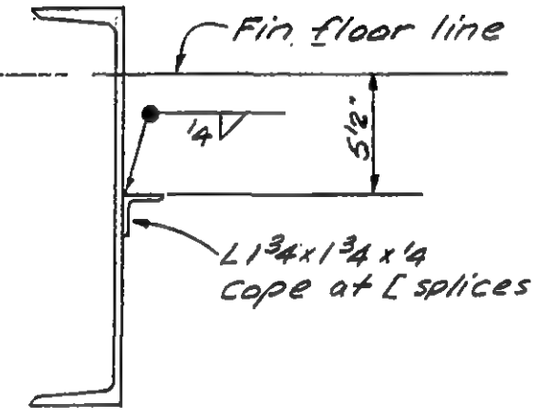

Detail 16.3

Typical East & West core perimeter floor 13

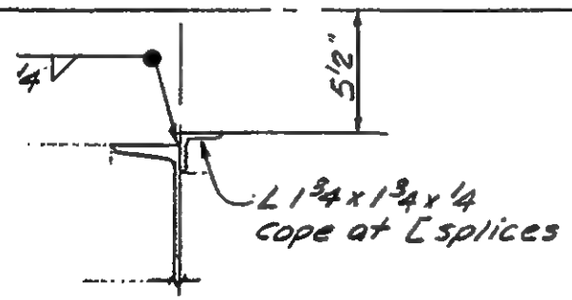

Detail 16.4

Typical North & South core perimeter floor 13

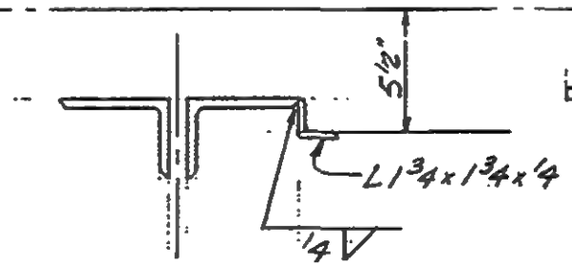

Detail 16.5

Typical trusses 29T6, T9 & T24

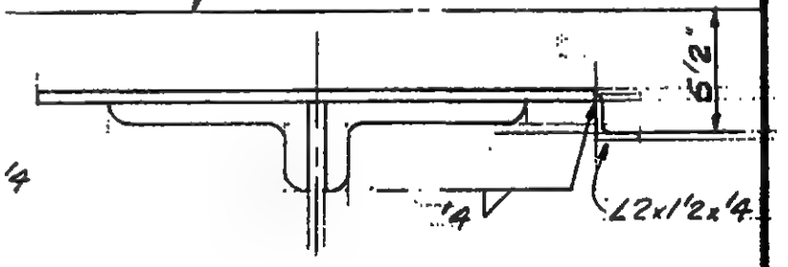

Detail 16.6

Typical trusses 29T5

LICENSED PROFESSIONAL ENGINEER — LESLIE E. ROBERTSON — No. 34960 — UNIVERSITY OF THE STATE OF NEW YORK

DESIGNED

DRAWN: A.L. FRANQUI

REVIEWED: W. Brewer R.

7-B8-16.1

SKILLING HELLE CHRISTIANSEN ROBERTSON — Structural & Civil Engineers

PROJECT: [illegible] CENTER | TITLE: FLOOR TRUSSES CONNECTION DETAILS | DATE: 5/15/69

REVISIONS

Add 2-#5 cont.

Note: Top chords of adjacent panels to be aligned vertically before welding

Add 2-#5 cont.

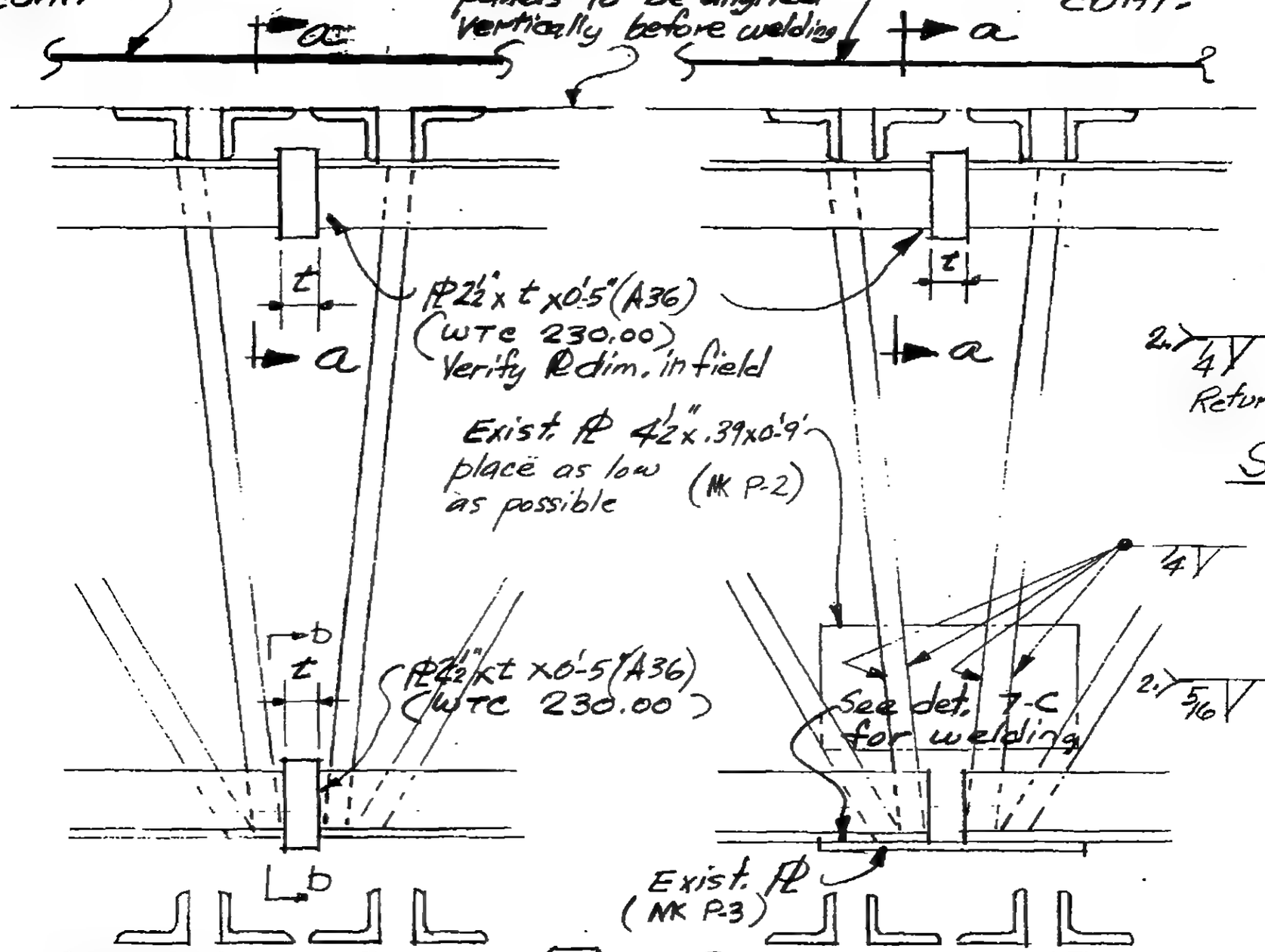

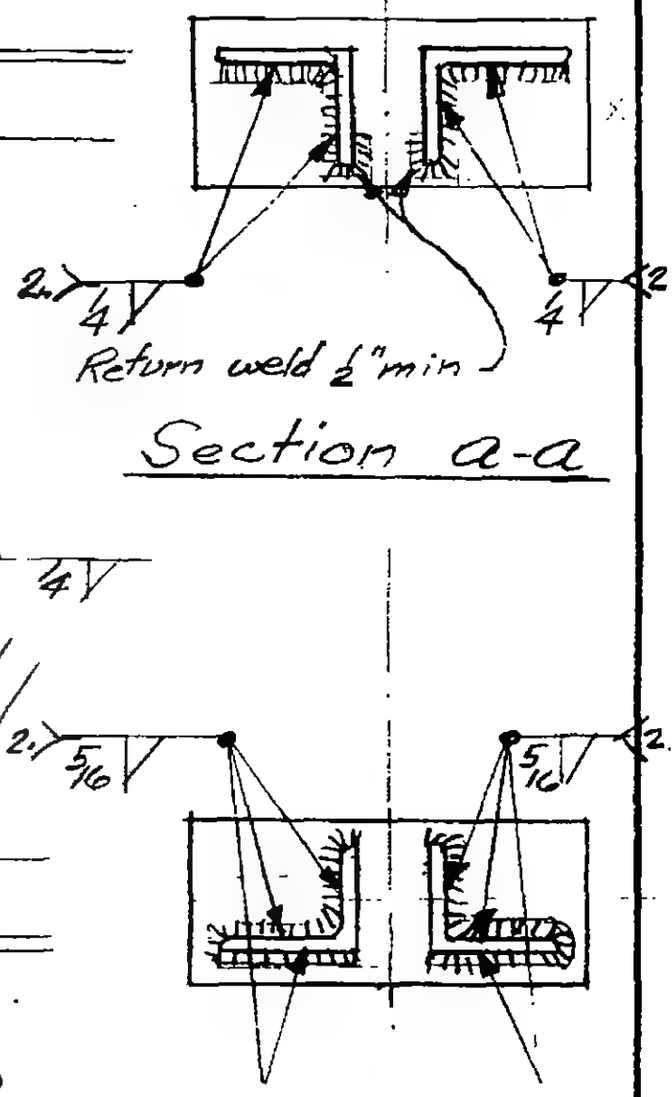

Connection Detail Option 1 — 7-C

Comn. Detail Option 2 — 7-C

Section a-a

Section b-b

Notes: 1. "t" to be determined from field measurements (t = 1" ±)
2. Use E80xx electrodes for field welds indicated.

DESIGNED E.C
DRAWN
REVIEWED W.B

7-C / 1

REVISIONS
5-29-69
6-13-69

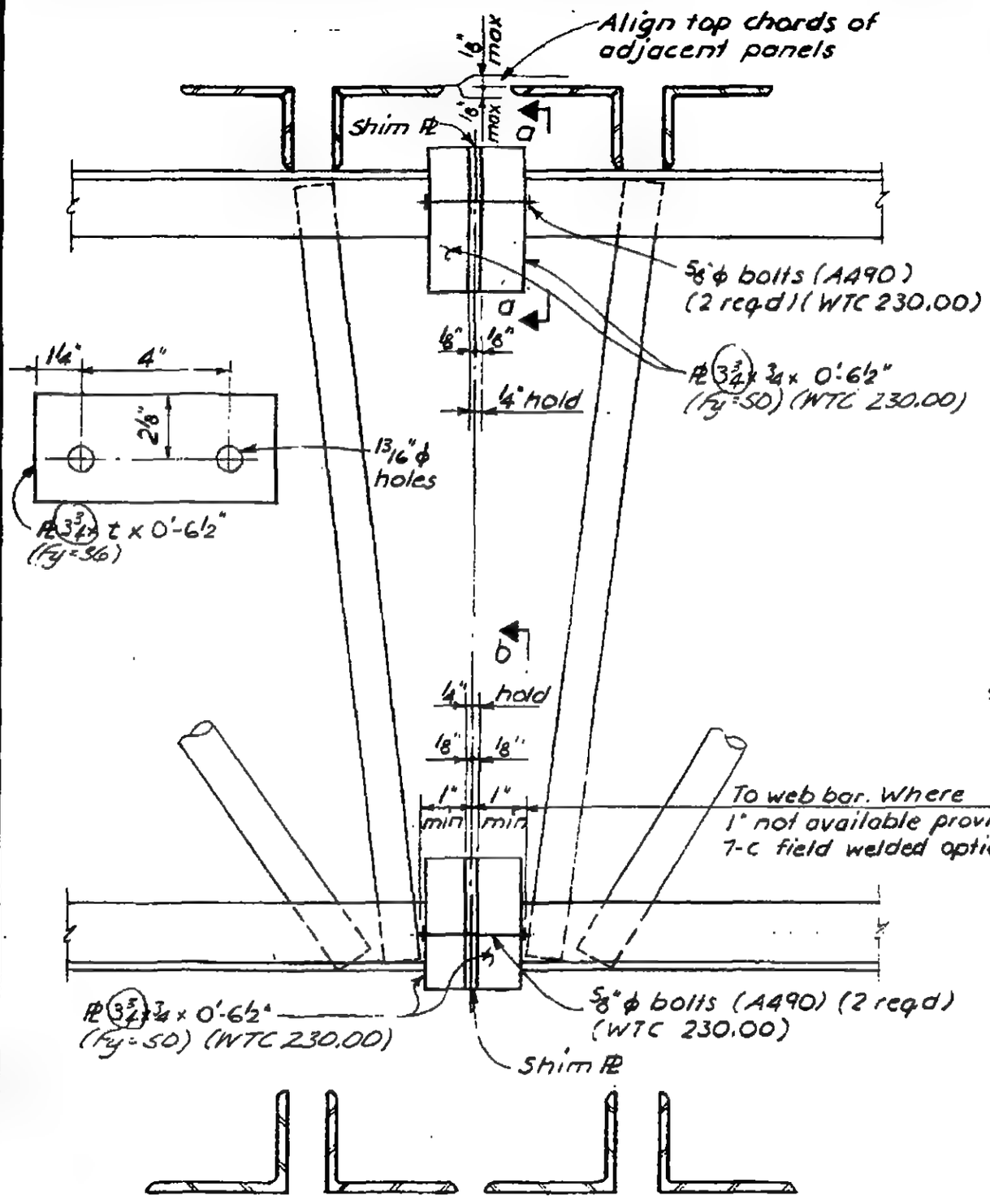

Conn Detail 7-c

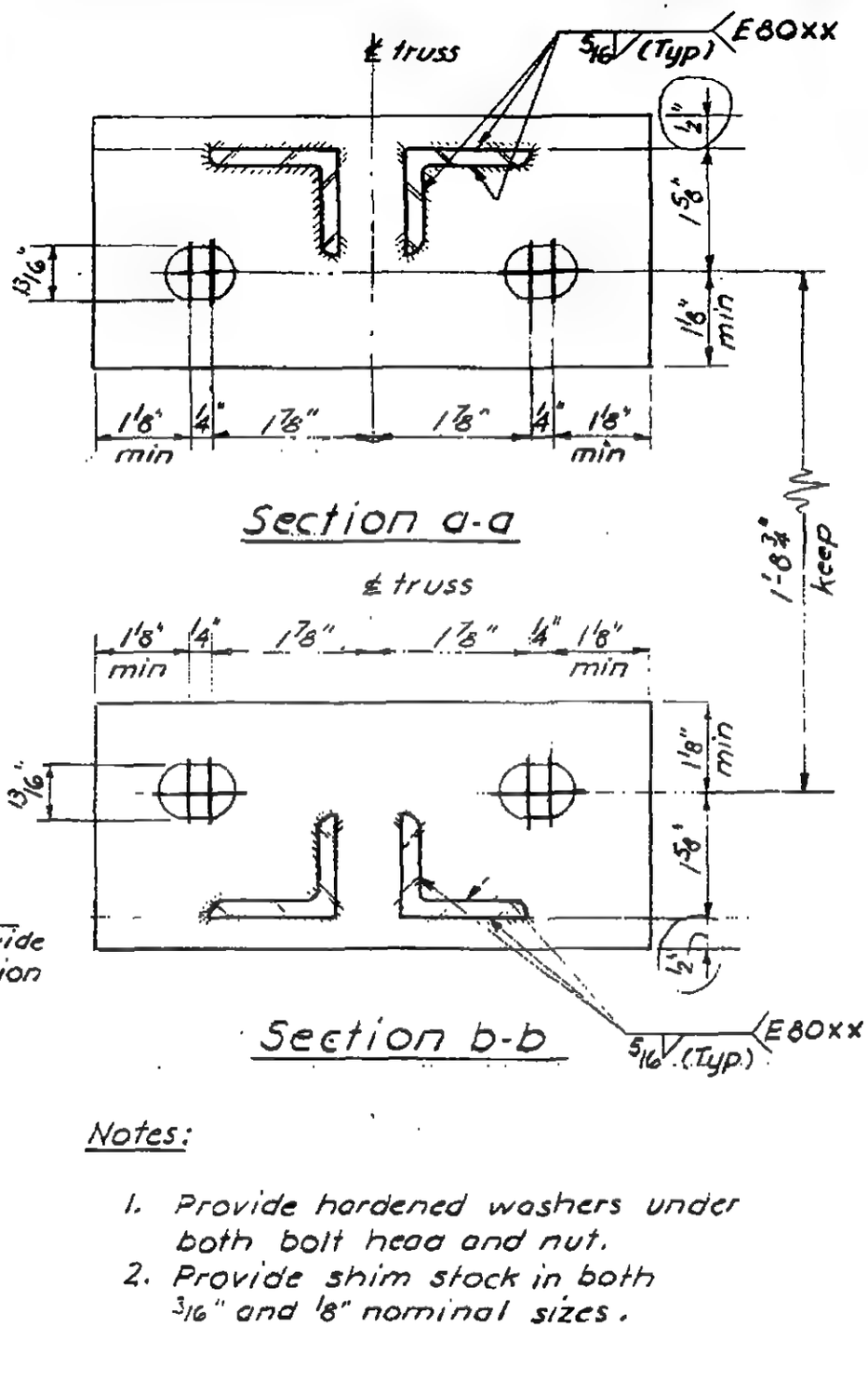

Notes:

1. Provide hardened washers under both bolt head and nut.
2. Provide shim stock in both 3/16" and 1/8" nominal sizes.

LICENSED PROFESSIONAL ENGINEER — LESLIE E. ROBERTSON — No. 34360 — UNIVERSITY OF THE STATE OF NEW YORK

DESIGNED H Roet
DRAWN J. Smith
REVIEWED W. Brewer

7 - c/2

SKILLING, HELLE, CHRISTIANSEN, ROBERTSON — Structural & Civil Engineers

PROJECT: THE WORLD TRADE CENTER | TITLE: FLOOR TRUSS CONNECTION DETAILS | DATE: 5-14-69

REVISIONS

Note: Top chords of adjacent panels to be aligned vert. before welding

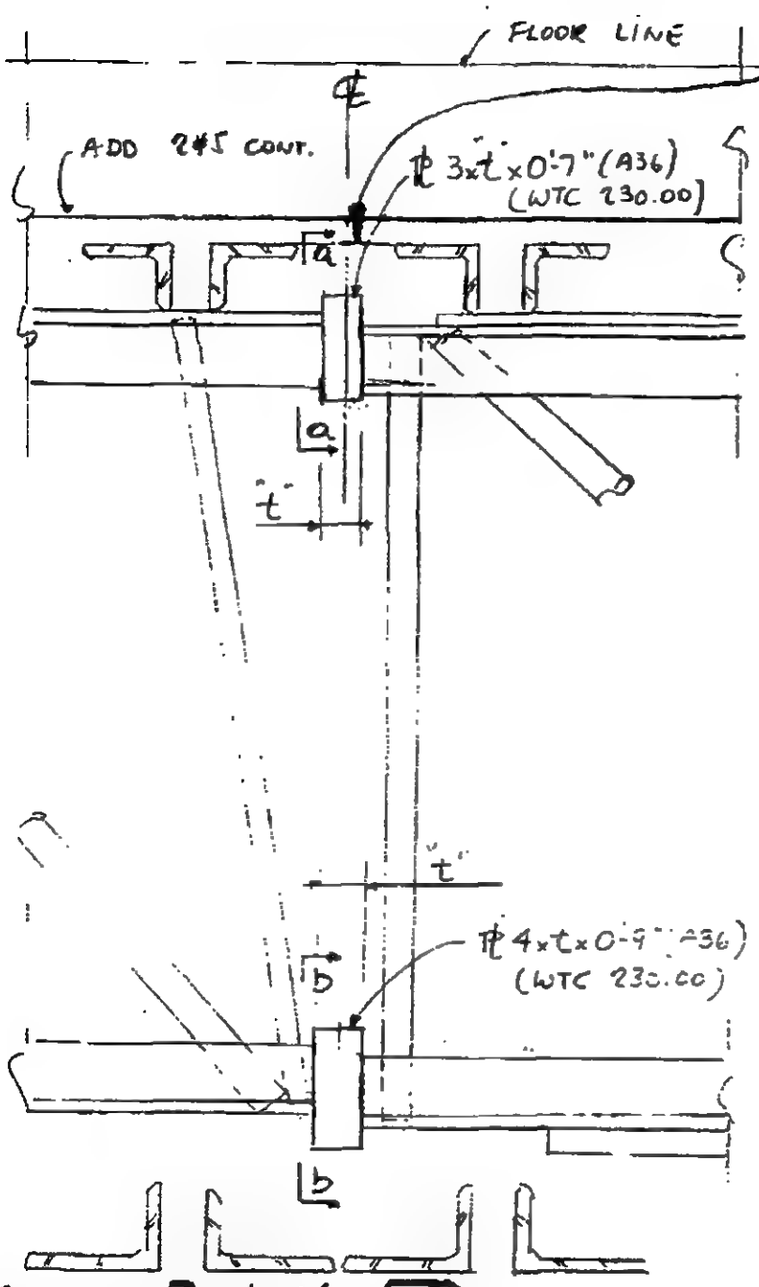

Conn. Detail Option 1 (8-C)

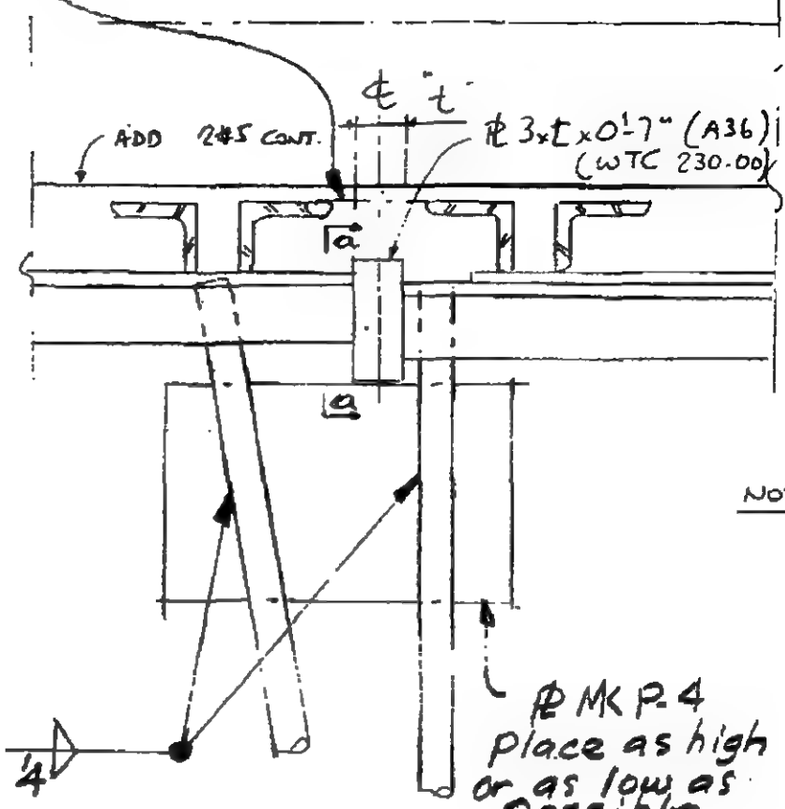

Conn. Detail Option 2 (8-C)

NOTES: 1. REMAINDER OF DETAILS AND PARTS NOT SHOWN SAME AS DETAIL 8-C, DWG. CD-202.
2. "t" TO BE DETERMINED FROM FIELD MEASUREMENTS.

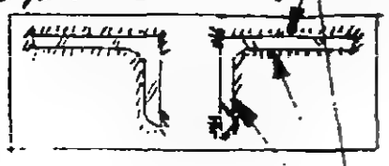

SECTION a-a — E80XX Electrodes 1/4 (TYP.) ea. L

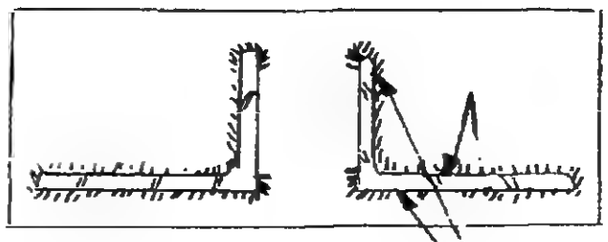

SECTION b-b — E80xx Electrodes 3/8 (TYP.) ea. L

LICENSED PROFESSIONAL ENGINEER — LESLIE E. ROBERTSON — No. 34360 — UNIVERSITY OF THE STATE OF NEW YORK

DESIGNED

DRAWN

REVIEWED

8-C/1

SKILLING, HELLE, CHRISTIANSEN, ROBERTSON — Structural & Civil Engineers

PROJECT: THE WORLD TRADE CENTER | TITLE: FLOOR TRUSS CONNECTION DETAIL | DATE: 5-8-69

REVISIONS

6/13/69

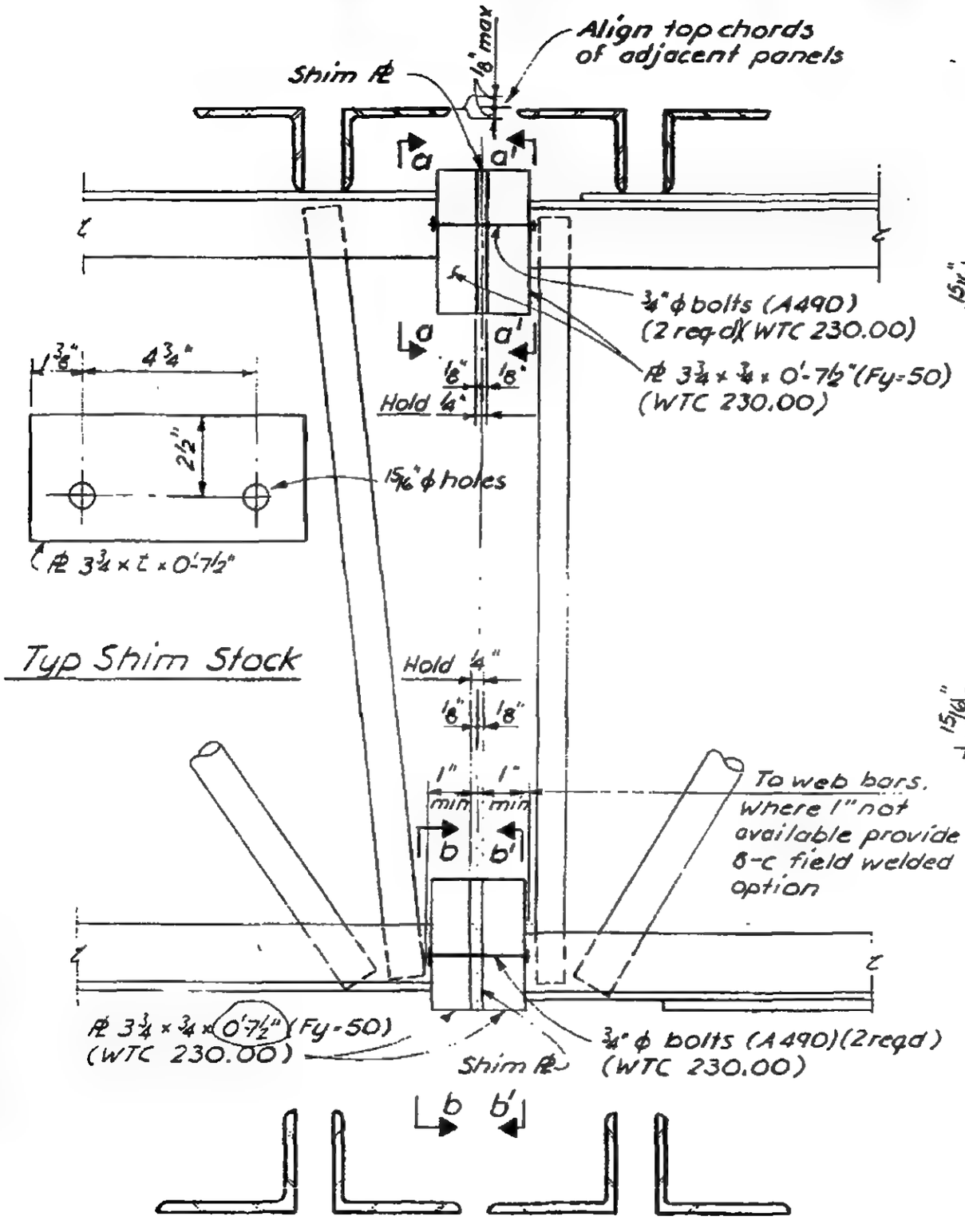

Conn Detail 8-c

Field bolted option.

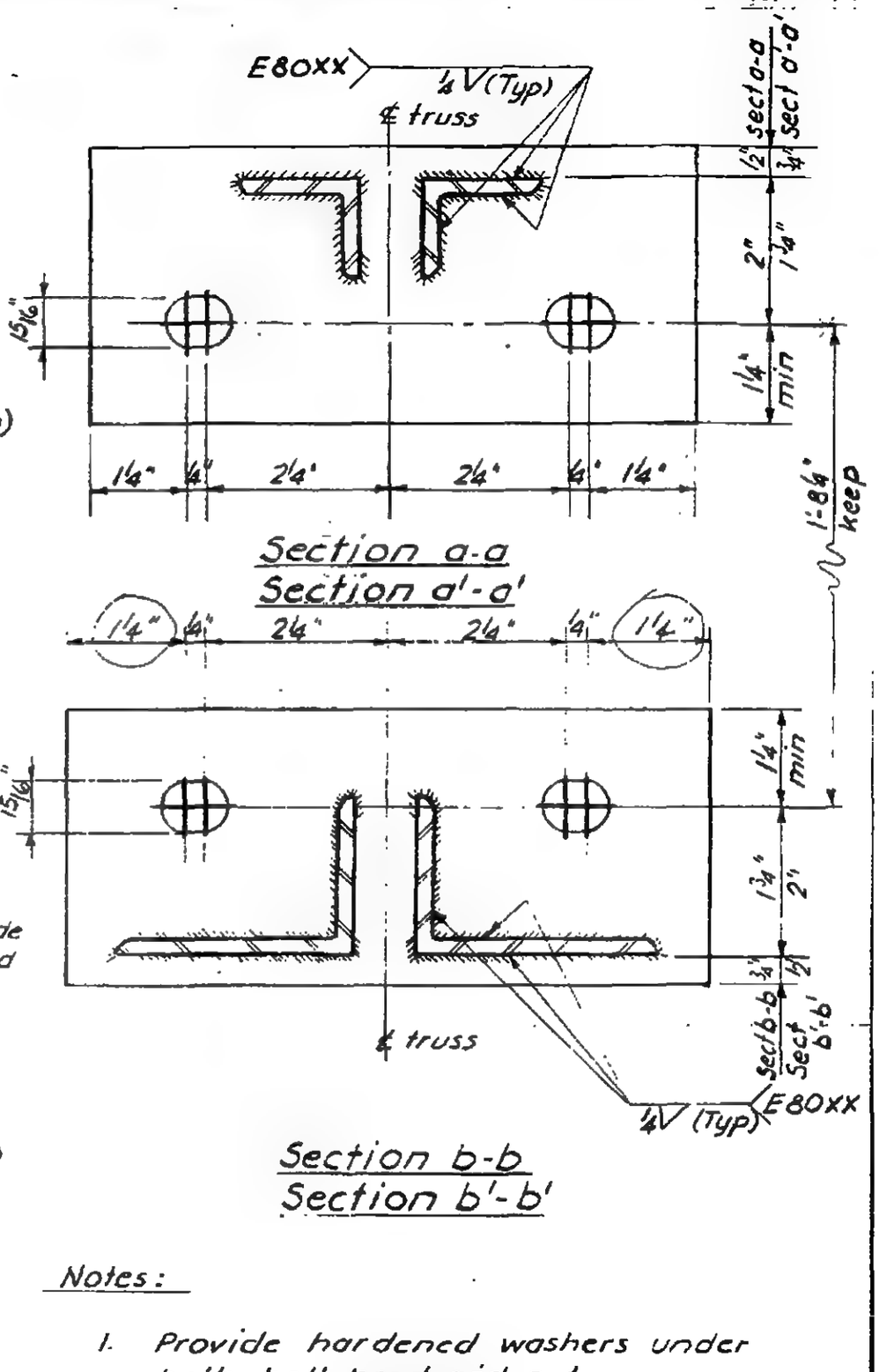

Section a-a
Section a'-a'

Section b-b
Section b'-b'

Notes:

1. Provide hardened washers under both bolt head and nut.
2. Provide shim stock in both 3/16" and ⅛" nominal sizes.

LICENSED PROFESSIONAL ENGINEER — LESLIE E. ROBERTSON — No. 34360 — UNIVERSITY OF THE STATE OF NEW YORK

DESIGNED: I. Roet
DRAWN: F. Smith
REVIEWED: W. Brewer

8-C/2

SKILLING, HELLE, CHRISTIANSEN, ROBERTSON — Structural & Civil Engineers

PROJECT THE WORLD TRADE CENTER | TITLE FLOOR TRUSS CONNECTION DETAILS | DATE 3-26-69

REVISIONS

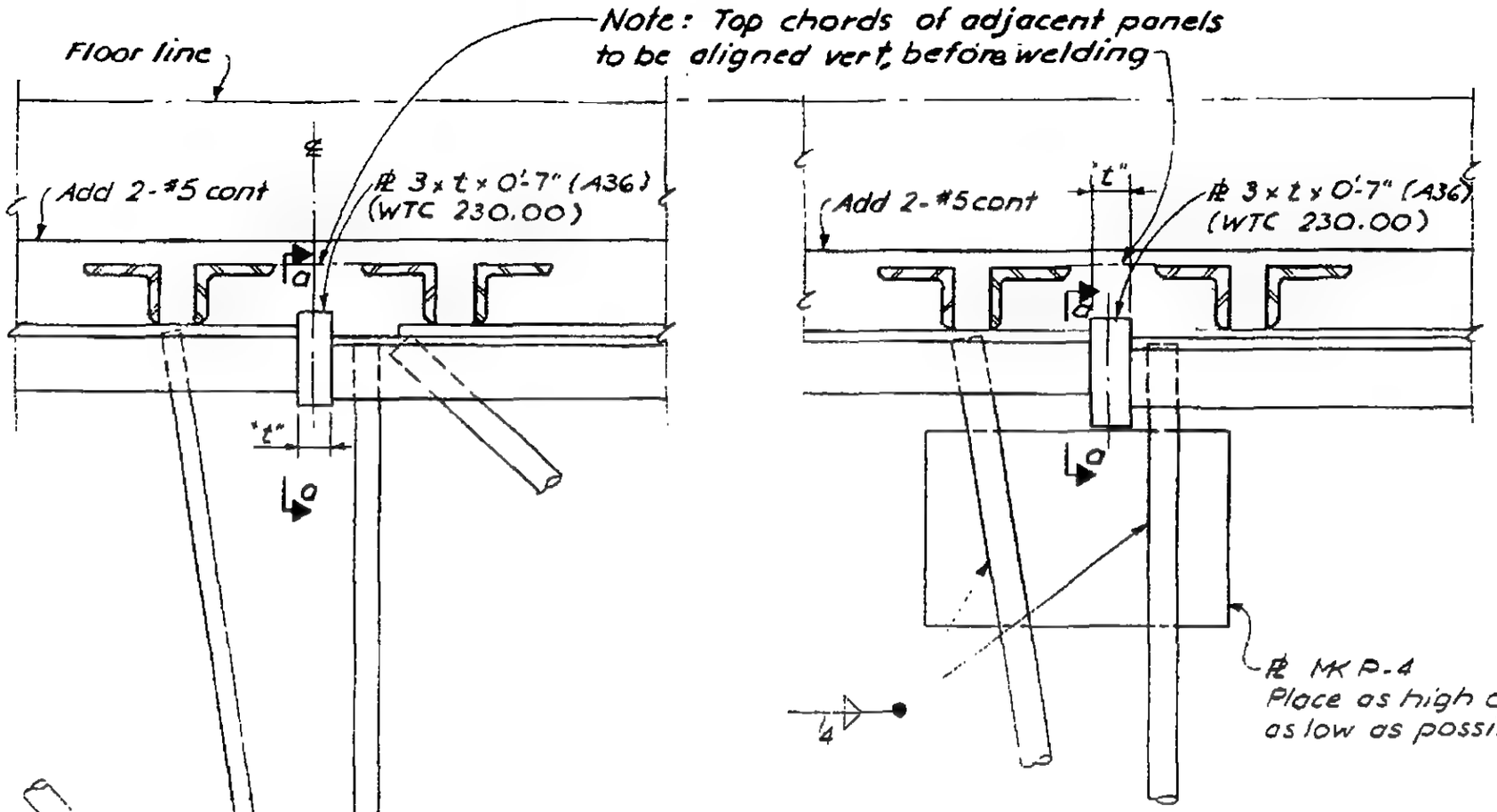

Connection Detail 9-C
Option 1

Connection Detail 9-C
Option 2

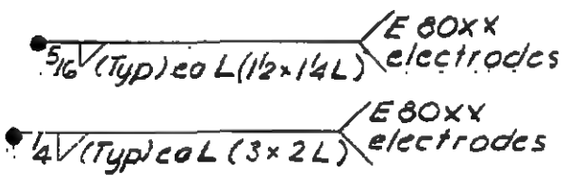

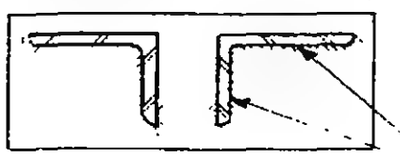

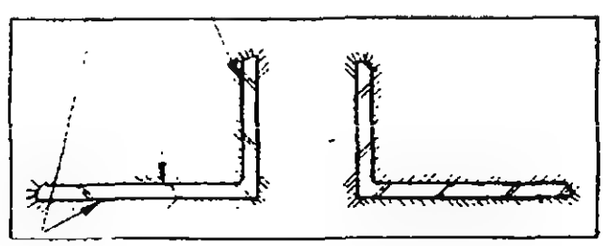

Section a-a

2 - (Typ) ea L — E 80 XX electrodes

Section b-b

Notes:
1. Remainder of details and parts not shown some as Detail 9-C, Dwg CD-203.
2. "t" to be determined from field measurements.

LICENSED PROFESSIONAL ENGINEER — LESLIE E. ROBERTSON — No. 34360 — UNIVERSITY OF THE STATE OF NEW YORK

DESIGNED

DRAWN E. Smith

REVIEWED

9 - C/1

SKILLING, HELLE, CHRISTIANSEN, ROBERTSON — Structural & Civil Engineers

PROJECT: THE WORLD TRADE CENTER | TITLE: FLOOR TRUSS CONNECTION DETAIL | DATE: 5-29-69

REVISIONS
6/13/69

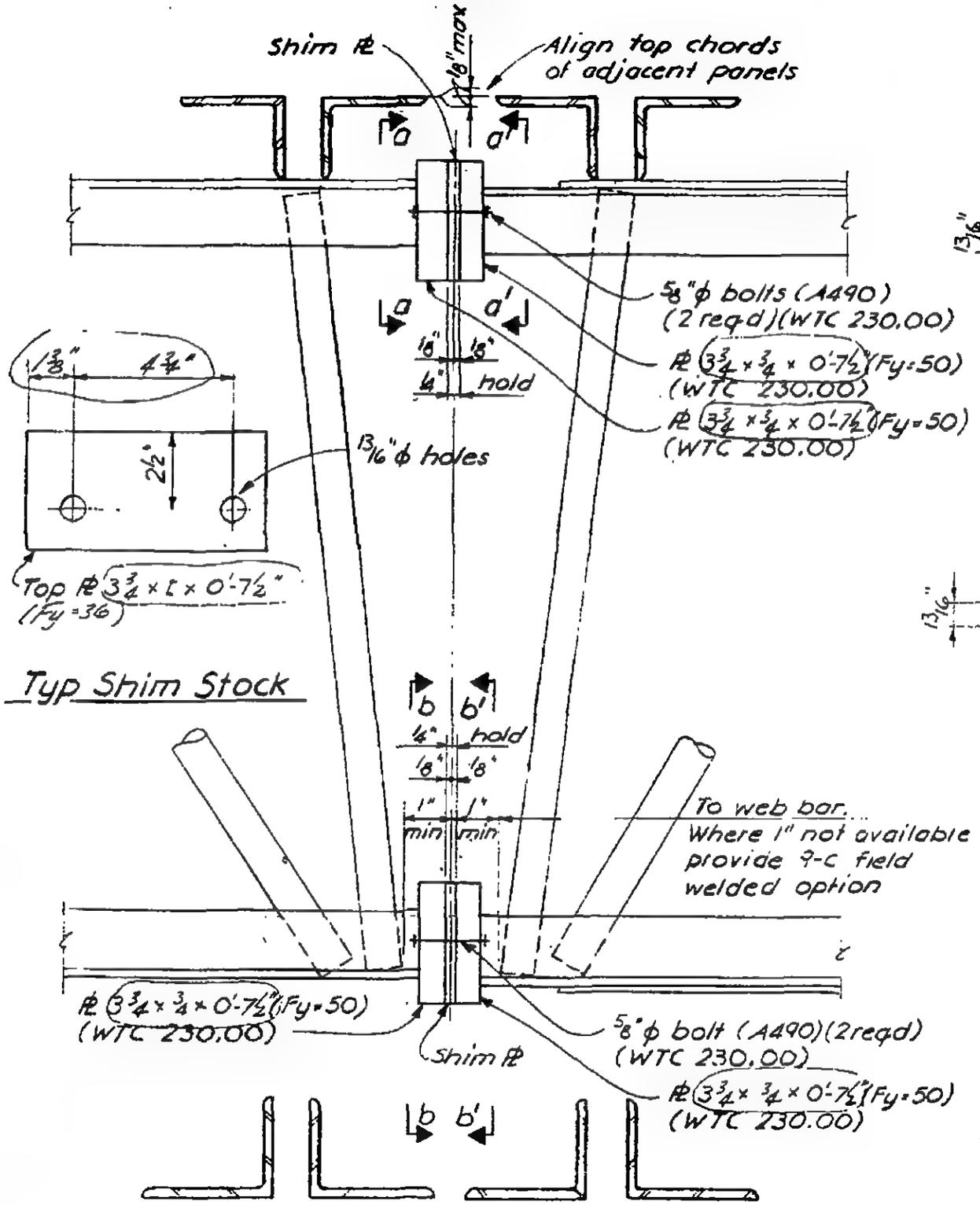

Conn Detail 9-c

Field bolted option.

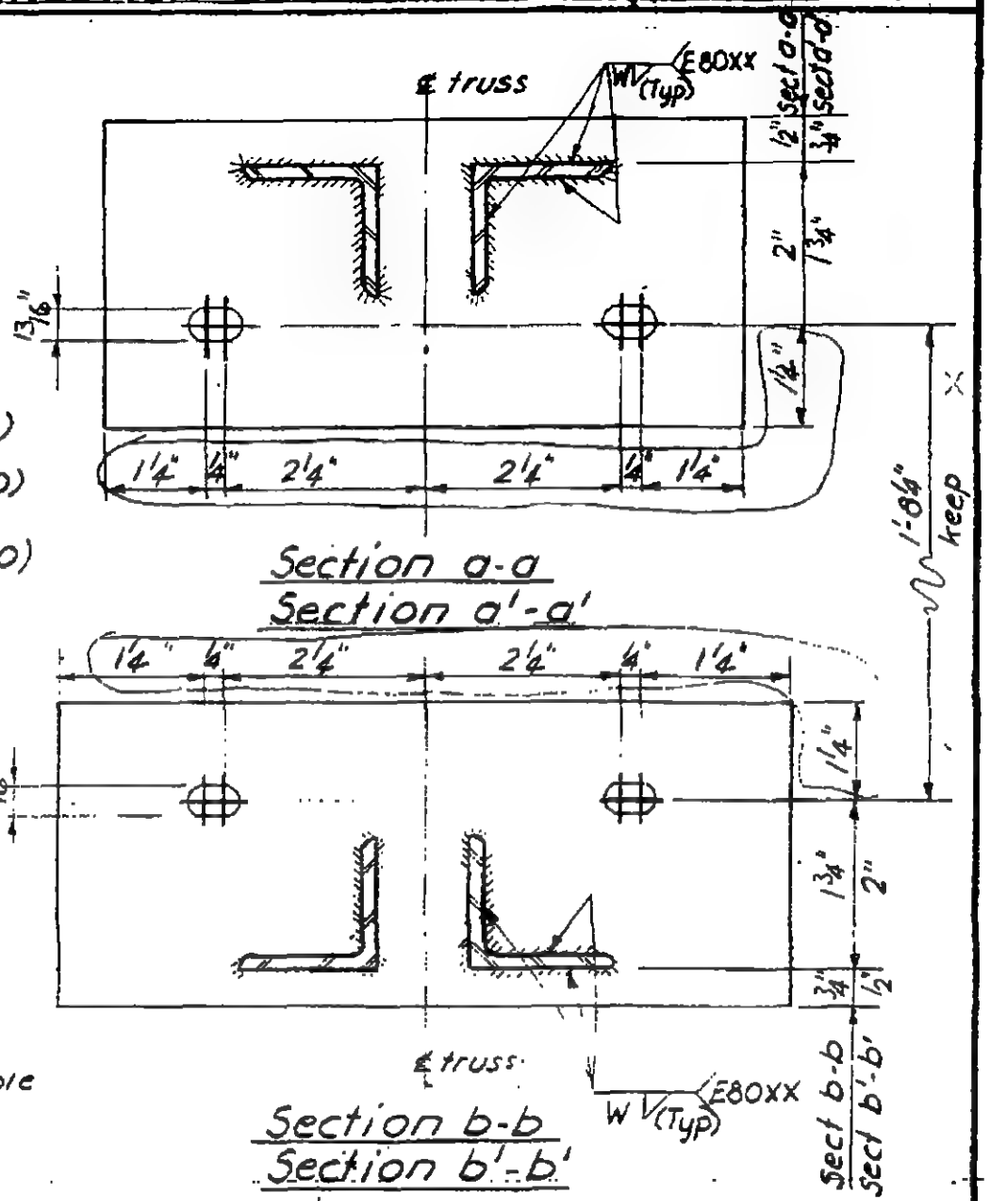

Section	a-a	a'-a'	b-b	b'-b'
W	5/16	1/4	5/16	1/4

Notes:

1. Provide hardened washers under both bolt head and nut.
2. Provide shim stock in both 3/16" and 1/8" nominal sizes.

LICENSED PROFESSIONAL ENGINEER — LESLIE E. ROBERTSON — No. 34360 — UNIVERSITY OF THE STATE OF NEW YORK

DESIGNED: Roet
DRAWN: F. Smith
REVIEWED: W Brewer

9 - c/2

SKILLING - HELLE - CHRISTIANSEN - ROBERTSON — Structural & Civil Engineers

PROJECT The World Trade Center | TITLE FLOOR TRUSS CONNECTION DETAILS | DATE 5-14-64

REVISIONS

Note: Top chords of adjacent panels to be aligned vert. before welding

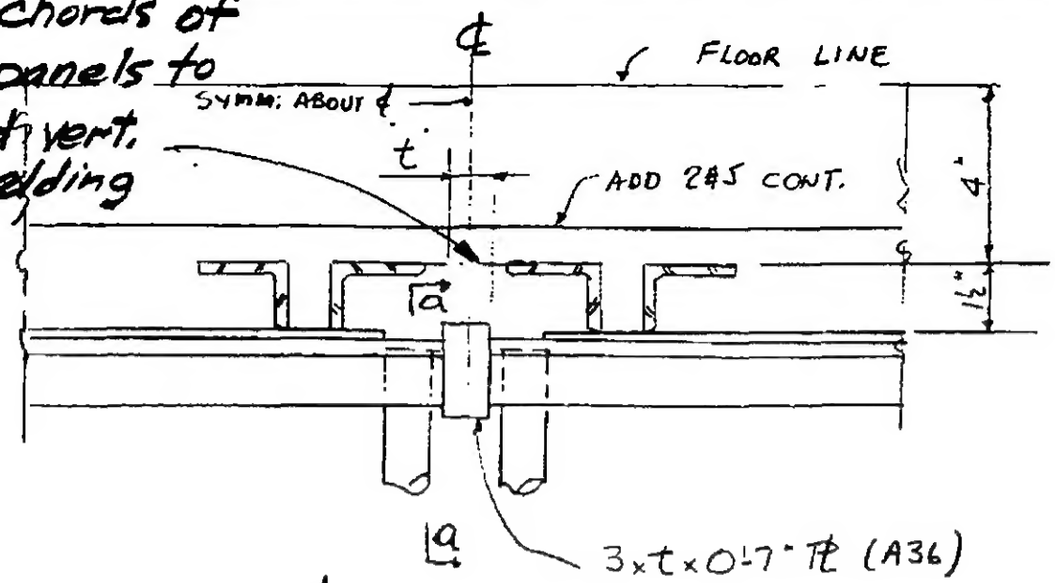

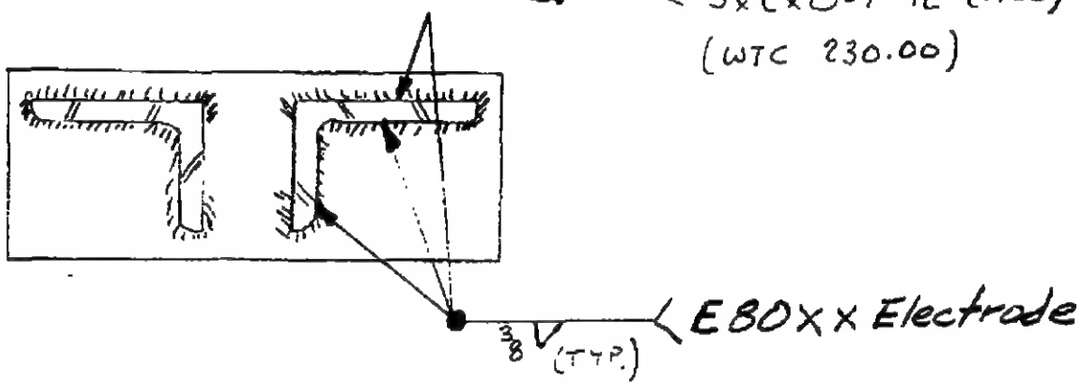

SECTION a-a

NOTES: 1. REMAINDER OF DETAIL AND PARTS NOT SHOWN SAME AS DETAIL 10-C, DWG. CD-202.
2. "t" TO BE DETERMINED FROM FIELD MEASUREMENTS.

CONNECTION DETAIL 10-C
Option

10-C/1

SKILLING, HELLE, CHRISTIANSEN, ROBERTSON — Structural & Civil Engineers

PROJECT THE WORLD TRADE CENTER | TITLE FLOOR TRUSS CONNECTION DETAIL | DATE 5-29-69

REVISIONS

6/13/69

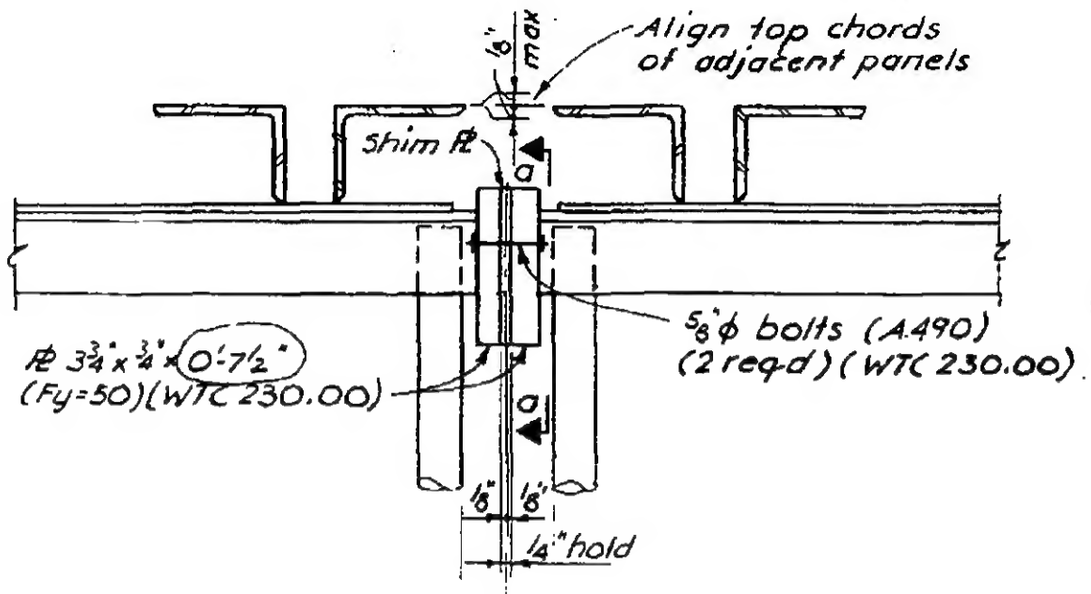

Note: For bot chord See basic connection 10c.

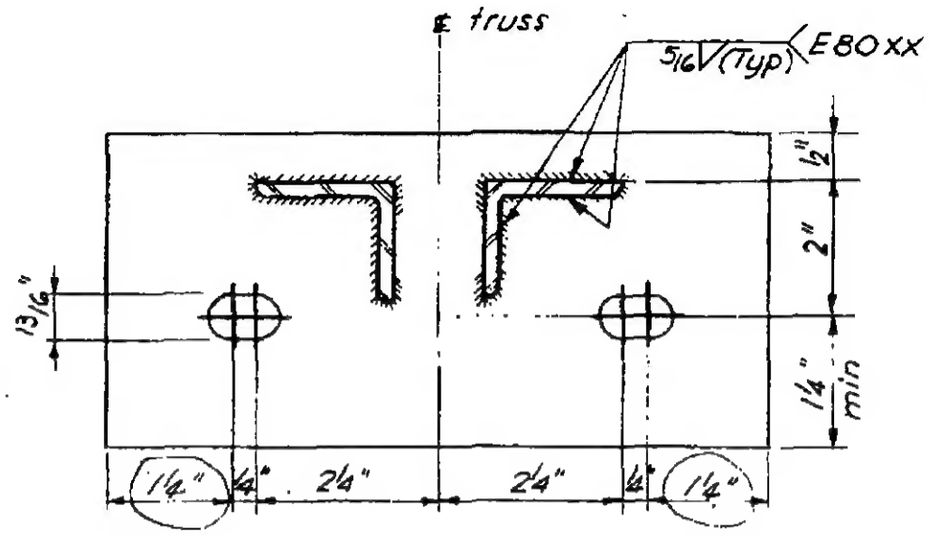

Section a-a

Conn Detail (10c)

Field bolted option

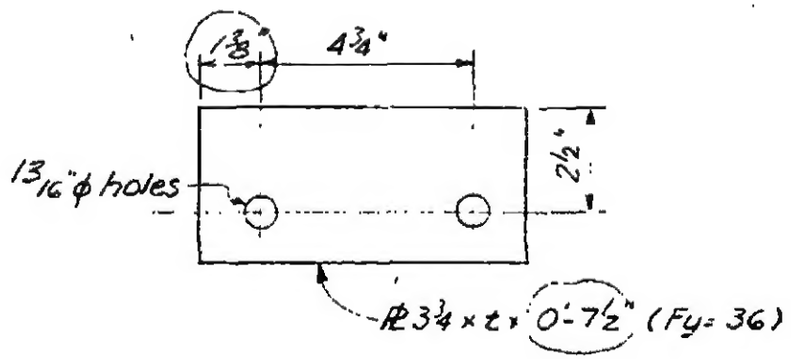

Typ Shim Stock

Notes

1. Provide hardened washers under both bolt head and nut.
2. Provide shim stock in both 3/16" and 1/8" nominal sizes.

LICENSED PROFESSIONAL ENGINEER — LESLIE E. ROBERTSON — No. 34360 — UNIVERSITY OF THE STATE OF NEW YORK

DESIGNED I Roet

DRAWN F. Smith

REVIEWED W. Brewer

SKILLING - HELLE - [illegible] - ROBERTSON [illegible]

PROJECT THE WORLD TRADE CENTER | TITLE FLOOR TRUSS CONNECTION DETAIL | 5/14/69

REVISIONS

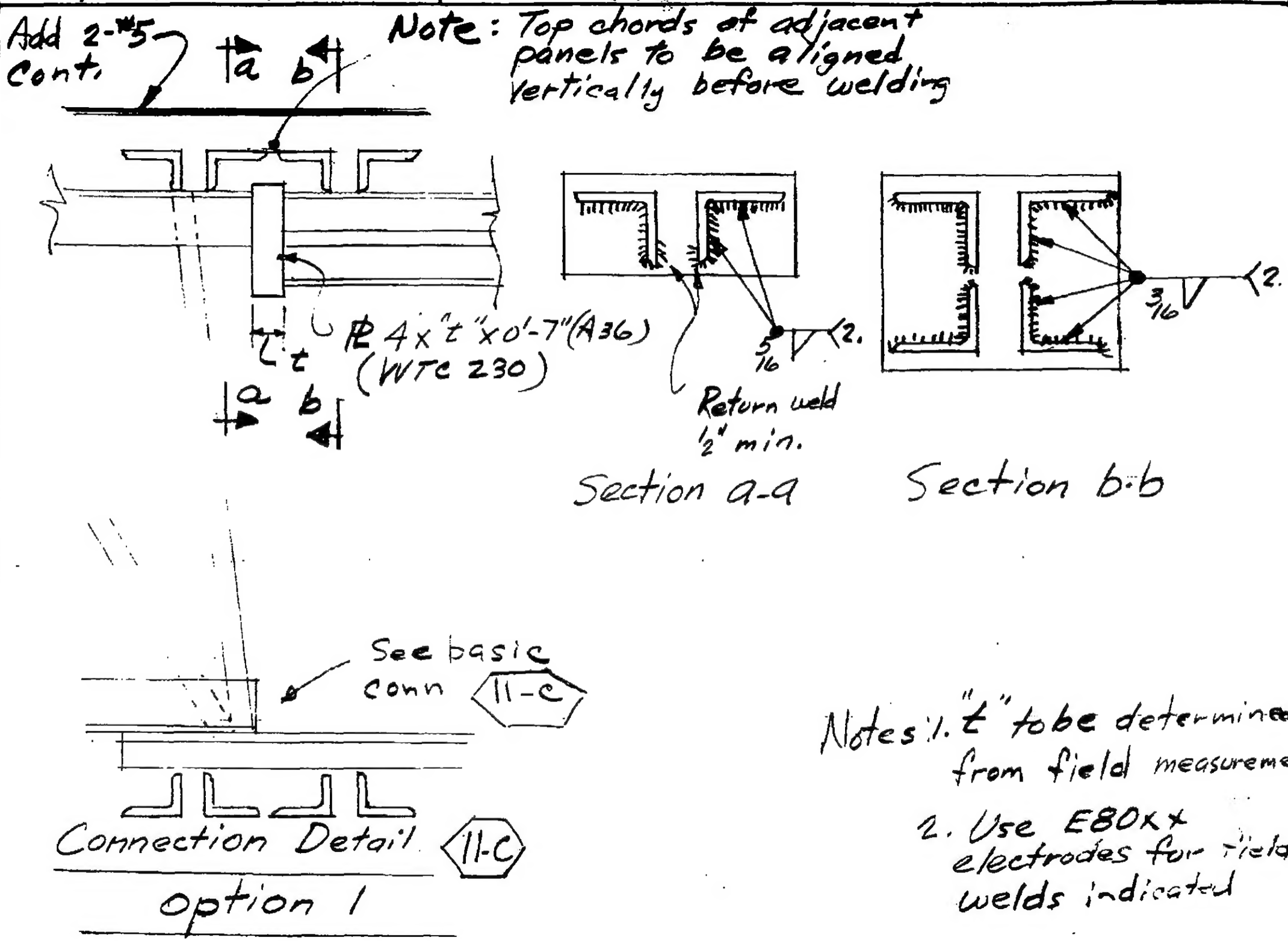

Notes: 1. "t" to be determined from field measurement

2. Use E80xx electrodes for field welds indicated

11-C/1

SKILLING HELLE CHRISTIANSEN ROBERTSON — Structural & Civil Engineers

PROJECT THE WORLD TRADE CENTER | TITLE FLOOR TRUSS CONNECTION DETAIL | DATE 5-29-69

REVISIONS

5/13/69

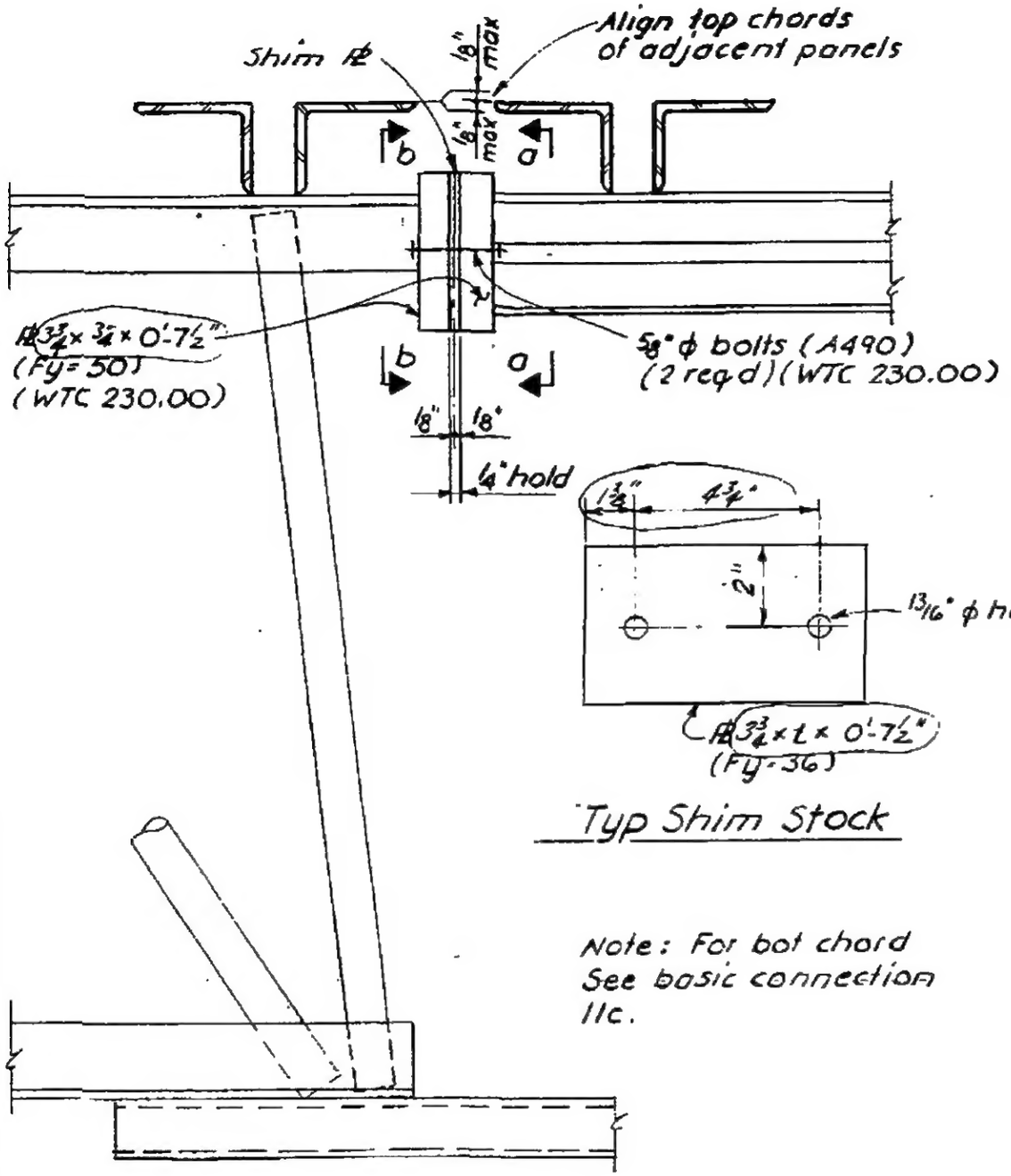

Typ Shim Stock

Note: For bot chord See basic connection IIc.

Conn Detail (11-C)

Field bolted option

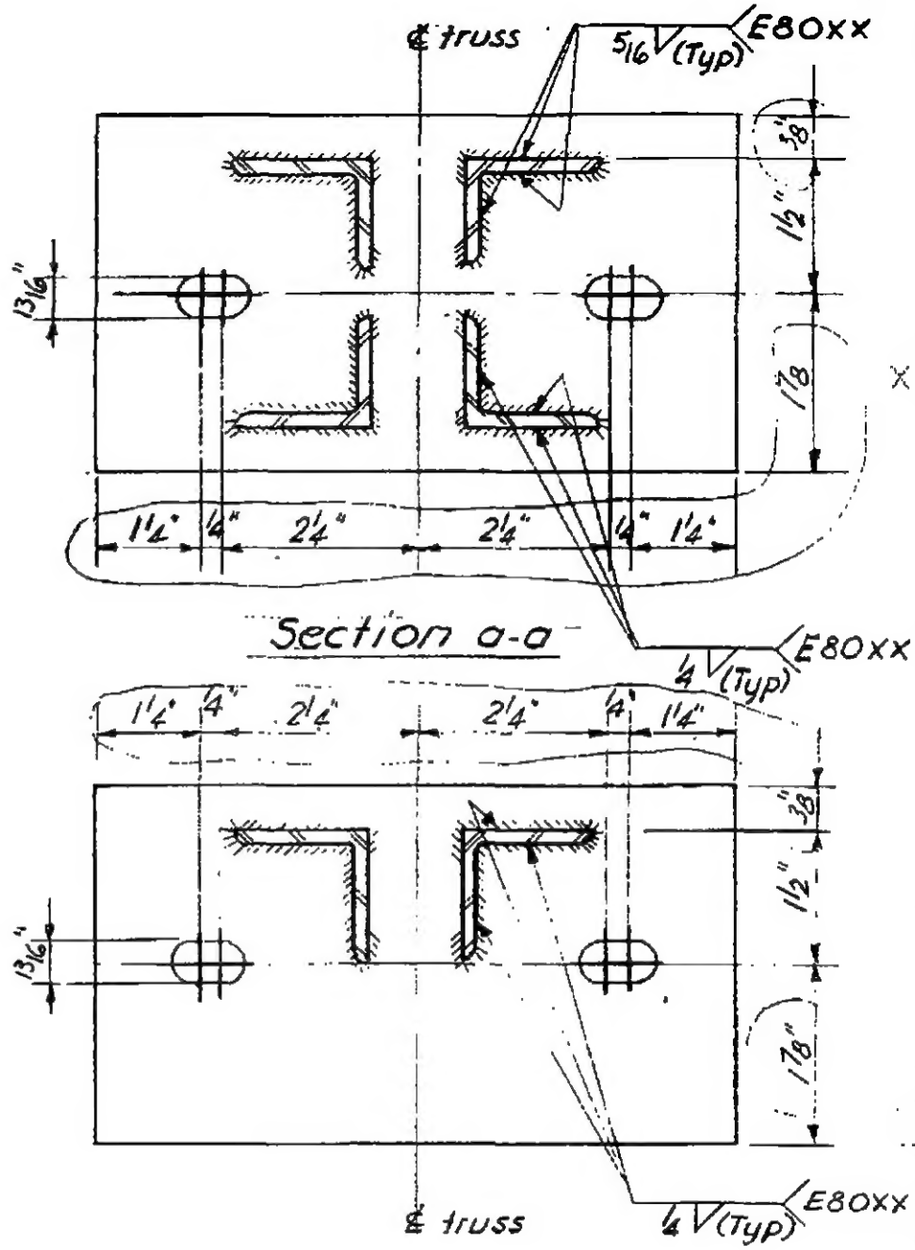

Section b-b

Notes:

1. Provide hardened washers under both bolt head and nut.
2. Provide shim stock in both 3/16" and 1/8" nominal sizes.

DESIGNED J. Roet
DRAWN F. Smith
REVIEWED W. Brewer

11 - c/2